TEXAS EQUIPMENT

2 Post Asymmetric Hydraulic Lift
10,000 lbs

United States

17779 Main Street Suite C
Irvine, CA 92614 USA
Tel: +1 (949) 333-3800
Fax: +1 (949) 333-3804

United Arab Emirates

P.O. Box 121971
Saif Zone A2-032
Sharjah, UAE
Tel: +971 (06) 552 98 60
Fax: +971 (06) 552 98 61

Egypt

28 Abdel Azim El-Ghoilemi Street
Nasr City, Cairo – Egypt
Tel: +(202) 22747083
Fax: +(202) 22876559



Model
27310

Specifications:

- Lifting Capacity 10,000 lbs (4,500 kg)
- Lifting Height 3½ - 73¼" (90 - 1860 mm)
- Overall Dimensions 132⅝ (L) x 136⅛ (W) x 112¼" (H) (3369 x 3457 x 2850 mm)
- Front Arm Length 23¼ - 47½" (591 - 1208 mm)
- Rear Arm Length 38½ - 72½" (978 - 1840 mm)
- Net Weight 1765 lbs (800 kg)
- Shipping Weight 1800 lbs (820 kg)
- Shipping Size 143¾ x 34⅝ x 27½" (3650 x 880 x 700 mm)



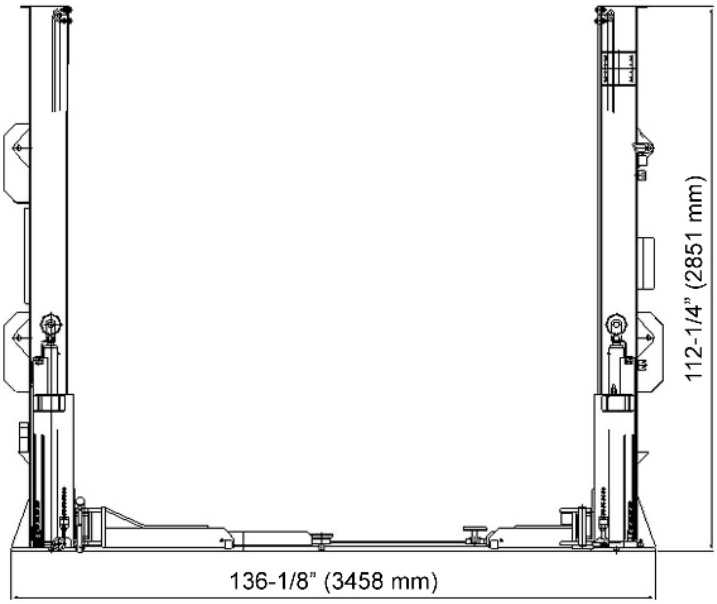

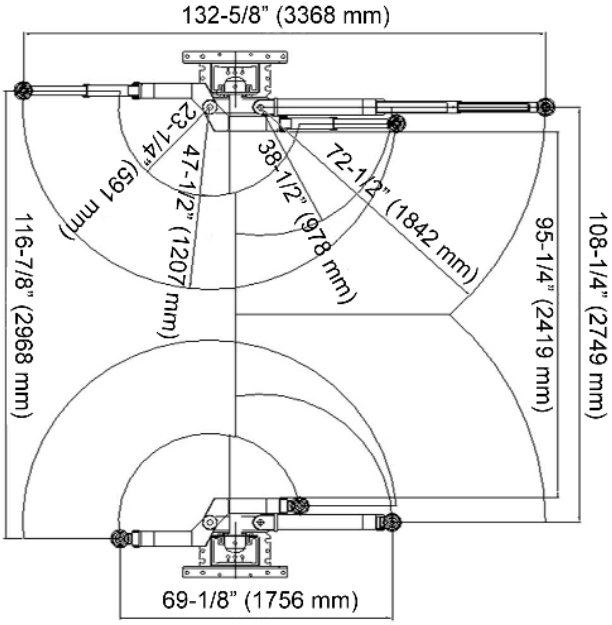

Features:

- US Made Electric / Hydraulic Power System
- Electromagnetic Single-point Lock Release
- Columns Constructed from Single-piece High-strength Steel
- Twin Full-stroke Direct-pull Cylinders
- Three Stage Telescopic Arms For Extended Reach
- Automatic Arm Restraints While Vehicle is Raised
- CE Certified Shut-off System
- Padded Columns for Door Protection
- Truck & Van Adapters Included