57309

Four Post Lift

9,000 lbs. Capacity

(4,500 lbs. per axle)

TEXAS EQUIPMENT



INSTALLATION / OWNERS MANUAL

Jan 2019

READ THIS MANUAL THOROUGHLY BEFORE INSTALLING, OPERATING, OR MAINTAINING THIS LIFT. WHEN DONE WITH INSTALLATION BE SURE TO RETURN DOCUMENTS TO PACKAGE AND GIVE ALL MATERIALS TO LIFT OWNER/OPERATOR. WHEN INSTALLATION IS COMPLETE BE SURE TO RUN LIFT UP AND DOWN A FEW CYCLES WITH AND WITHOUT "TYPICAL" VEHICLE LOADED ON LIFT.

TABLE OF CONTENTS

- ð IMPORTANT INFORMATION
- ð OWNER / EMPLOYER RESPONSIBILITY
- ð LIFT SPECIFICATIONS
- ð FLOOR PLAN LAYOUT
- ð TOOLS REQUIRED
- ð SELECTING SITE
- ð MAIN COMPONENTS & ACCESSORY IDENTIFICATION
- ð INSTALLATION INSTRUCTIONS
- ð CASTER KIT ASSEMBLY / INSTALLATION
- ð FOUNDATION & ANCHORING REQUIREMENTS
- ð SAFETY INSTRUCTIONS & PROCEDURES
- ð OPERATION INSTRUCTIONS
- ð PREVENTIVE MAINTENANCE SCHEDULE
- ð TROUBLESHOOTING
- ð POWER UNIT PRIMING PROCEDURE
- ð LATCH & CABLE INSPECTION / ADJUSTMENTS
- ð EXPLODED VIEWS
- ð PARTS LIST
- ð WARRANTY POLICY

IMPORTANT INFORMATION

1. Always inspect the lift for damage and make note of any damage on the bill of lading.
2. In case of freight damage, call the truck line immediately and report the damage as a freight claim.
3. ***IMPORTANT!*** *Make sure you have extra help or heavy duty lifting equipment when unloading and assembling the lift.*
4. Please read the safety procedures and operating instructions in this manual before operating lift. Keep this manual near lift at all times. Make sure all operators read this manual.
5. ***IMPORTANT!*** *Are you installing in a level location? (Lift must be anchored in place if slope is greater than 1/8" per foot.)*
6. Make sure you have enough room to install the lock rods. You will need at least 9˘of clearance from the opposite end of the power unit end of the lift and 6˘at the power unit end. The power unit may be installed on the driver front or the passenger rear corner.
7. Never raise a car until you have double checked all bolts, nuts and hose fittings.
8. Always lower the lift to locks before going under the vehicle or storing another vehicle underneath lift.
9. Never allow anyone to go under the lift when raising or lowering.

OWNER / EMPLOYER RESPONSIBILITY

This is a vehicle lift installation/operation manual and no attempt is made or implied herein to instruct the user in lifting methods particular to an individual application. Rather, the contents of this manual are intended as a basis for operation and maintenance of the unit as it stands alone or as it is intended and anticipated to be used in conjunction with other equipment.

Proper application of the equipment described herein is limited to the parameters detailed in the specifications and the uses set forth in the descriptive passages. Any other proposed application of this equipment should be documented and submitted in writing to the factory for examination. The user assumes full responsibility for any equipment damage, personal injury, or alteration of the equipment described in this manual or any subsequent damages.

LIFT SPECIFICATIONS

57309 Lift Specifications	
Lifting Capacity	9,000 lbs.
Lifting Height	85˽
Overall Length w/ Ramps	239˽
Overall Length w/ no Ramps	197˽
Overall Width	123˽
Overall Width w/ Power Unit	134.5˽
Approach Ramp Length	37˽
Runway Tread Width	20˽
Runway Length	188.5˽
Runway Height	4.80˽
Column Height	97˽
Clearance between Columns	111.5˽
Clearance between Runways	39.5˽
Outside Runway to Outside Runway	79˽
Clearance Under Runways	81˽
Drive Thru Width	99˽
Locking Positions	11
Lifting Speed	90S
Power	115V-20 Amp / 1PH
Ship Weight	2,354 lbs.

FLOOR PLAN LAYOUT

57309

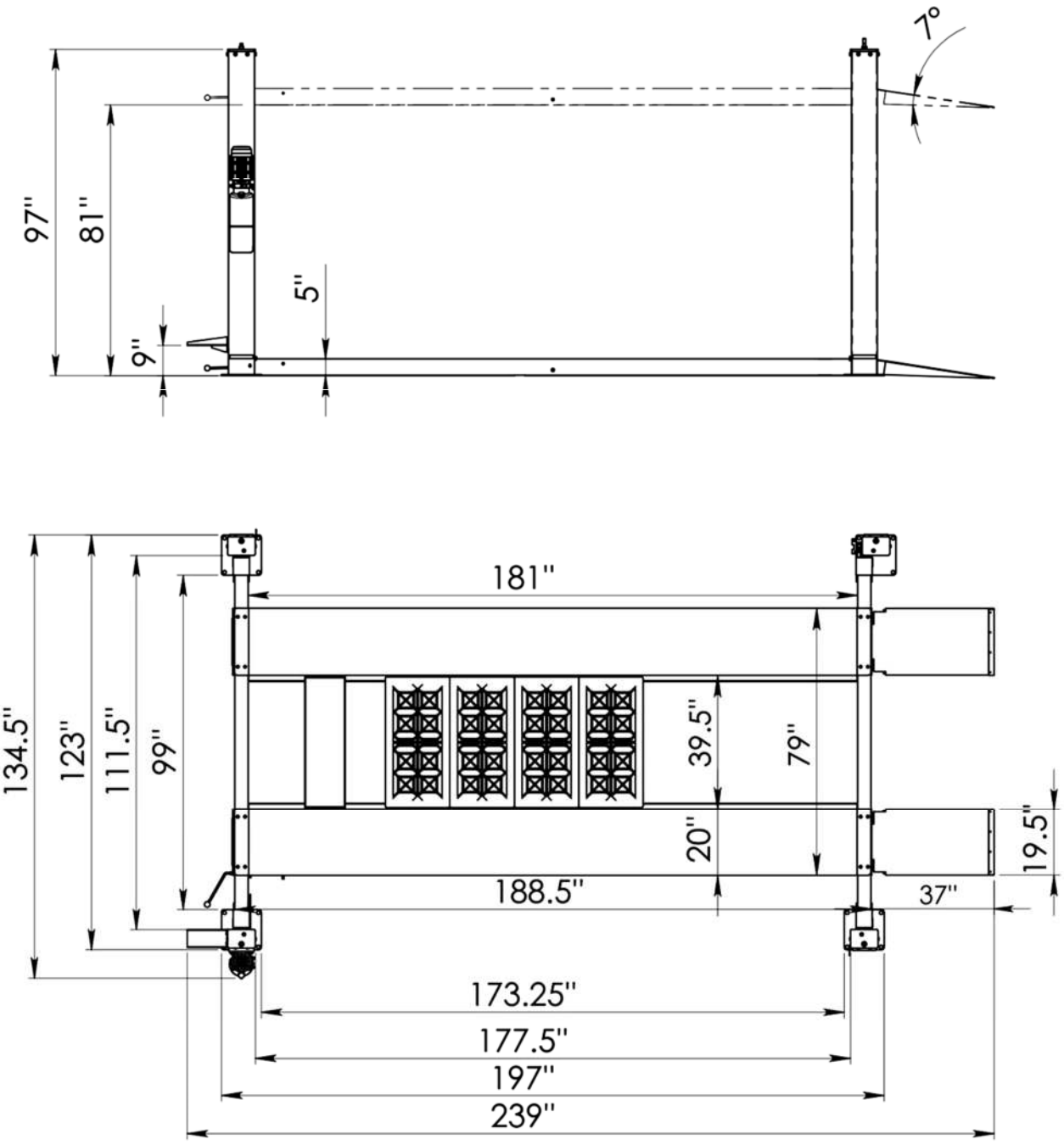

TOOLS REQUIRED

- Set of Metric Wrenches and/or Sockets
- Adjustable Wrench
- Locking Pliers
- 25˘Tape Measure
- Step Ladder
- Phillips Screw Driver
- Rotary Hammer Drill (If anchoring)
- 3/4" Masonry Bit (If anchoring)
- 3 Gallons of Hydraulic Oil*

*Recommended Oil: ISO 32 Light Hydraulic Oil

SELECTING SITE

Before installing your new lift, check the following.

OVERHEAD OBSTRUCTIONS: The area where the lift will be located should be free of overhead obstructions such as heaters, building supports, electrical lines etc.

FLOOR REQUIREMENTS: Visually inspect the site where the lift is to be installed and check for cracked or defective concrete. This lift must be installed on a solid level concrete floor with no more than 2 degrees of slope. A level floor is suggested for proper installation and level lifting. If a floor is of questionable slope, consider a survey of the site and/or the possibility of pouring a new level concrete slab. This lift is designed to be installed on a minimum of 4" thick, 3000psi, with steel reinforced concrete. Do not install this lift on asphalt, wood, or any other surface other than described. This lift is only as strong as the foundation on which it is installed.

NOTE:* This Lift does not require bolting to the floor (BUT) If you choose the option to anchor the Lift to the floor, please follow the detailed instructions in the manual and criteria above.** ***(See page 15)

DO NOT install this lift outdoors unless special consideration has been made to protect the power unit from weather conditions. **The Power unit is not water proof!**

DO NOT install lift close to wall. It is necessary to leave adequate clearance for safely walking. Suggested clearance to be 1 meter (3 feet) at min.

OPERATING CONDITIONS: Lift is not intended for outdoor use and has an operating ambient temperature range of 41º-104ºF (5º-40ºC).

MAIN COMPONENTS IDENTIFICATION

57309

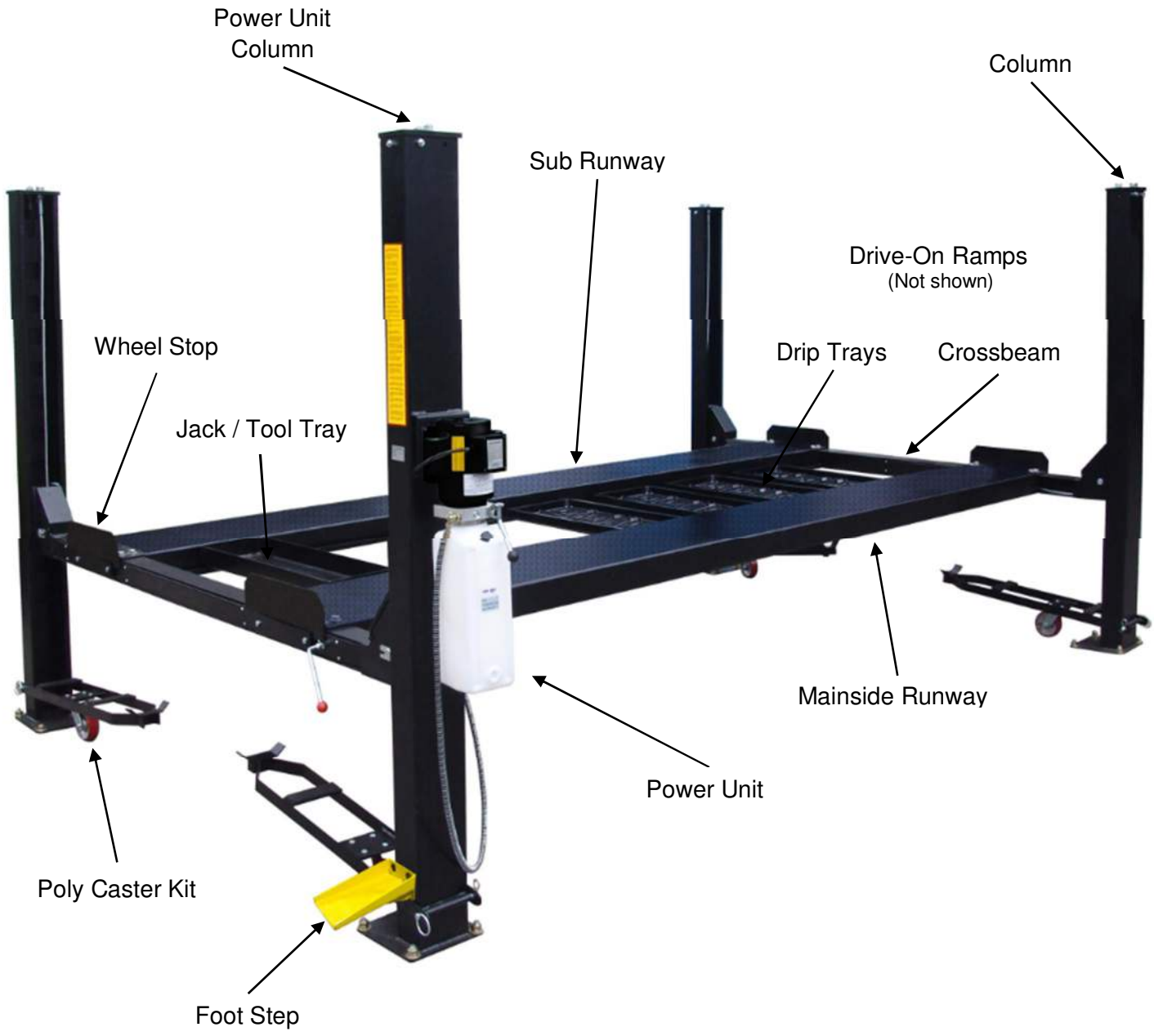

OPTIONAL ACCESSORIES NOT SHOWN:

- RJ-45 Rolling Scissor Jack ¯ 4,500 lbs. capacity

INSTALLATION INSTRUCTIONS

Improper installation can cause accelerated wear, resulting in catastrophic failure which may cause property damage and / or bodily injury. Manufacturer will assume no liability for loss or damage of any kind, expressed or implied, resulting from improper installation or use of this product. Read this installation manual in its entirety before attempting to install or operate the lift.

1. Remove plastic wrap from top Runway and remove all hardware. This includes the Power Unit, :wire braded˘Hydraulic Hose and Hardware Box.

2. While the Mainside Runway (Fig. 2) is upside down, find the end of the Hydraulic Hose that is already connected to the Cylinder. Locate hole on the side of the Mainside Runway (#1) and install the 90 degree Fitting (#61) securing to runway with Jam Nut. Also remove the plastic shipping ties securing the pre-installed Cables.

3. With the Mainside Runway upside down, pull to extend the Cable Ends through the holes on each end of the Runway. Also, ensure the hydraulic fittings are tightened.

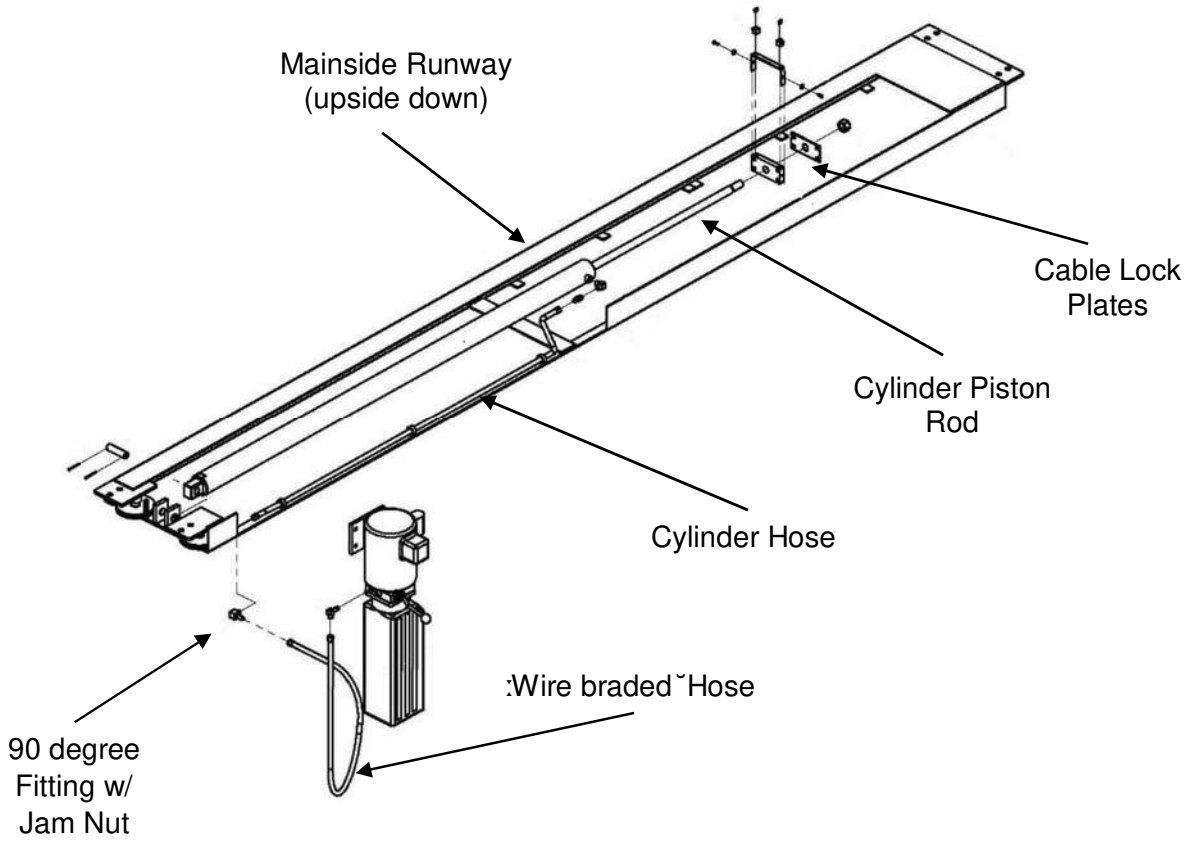

Fig. 2

4. Fully extend the Cylinder Piston Rod by pushing or pulling on the Cable Lock Plates (#41 & #42) mounted on the end of the Cylinder.

5. Now unbolt the top Mainside Runway (#3) taking the necessary safety precautions to support runway, as it will need to be flipped over. ***Note:* Using some type of hoist is recommended to carefully flip the Runway over, so it's no longer upside down.**

6. Locate the Mainside Runway in your bay with the Hydraulic Fitting (#61) facing toward your previously chosen corner for the Power Unit.

7. Unbolt all four Columns from the shipping brackets and place the Power Unit Column (#1) with mount bracket in the above chosen corner. Arrange the other three Sub Columns (#2) in the remaining corners.

8. Unpack the Crossbeams, Cover panels, Ramps, Drip Trays, Jack Tray, Lock Ladders and Caster Kit from the lower Sub Runway (#2). Remove the linkage rod Cover Panels (#68, #69, #70 & #71) (Fig. 3) if not already removed. They will be reinstalled later.

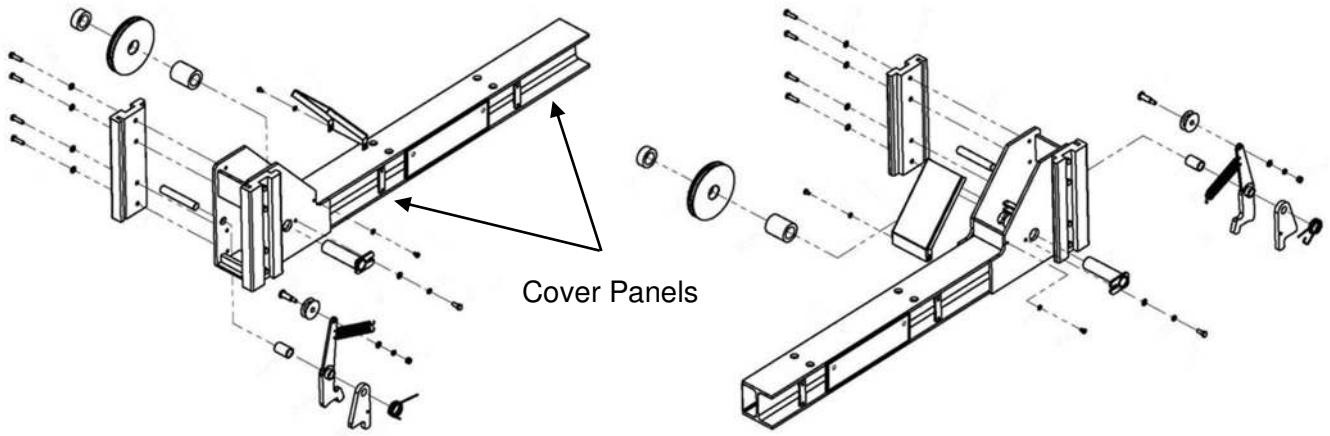

Fig 3

9. Arrange the Crossbeams so that the Latches˘Linkage Rods are facing outward and the Short Rod (#83) is closest to the Power Unit Column, as shown in (Fig.4).

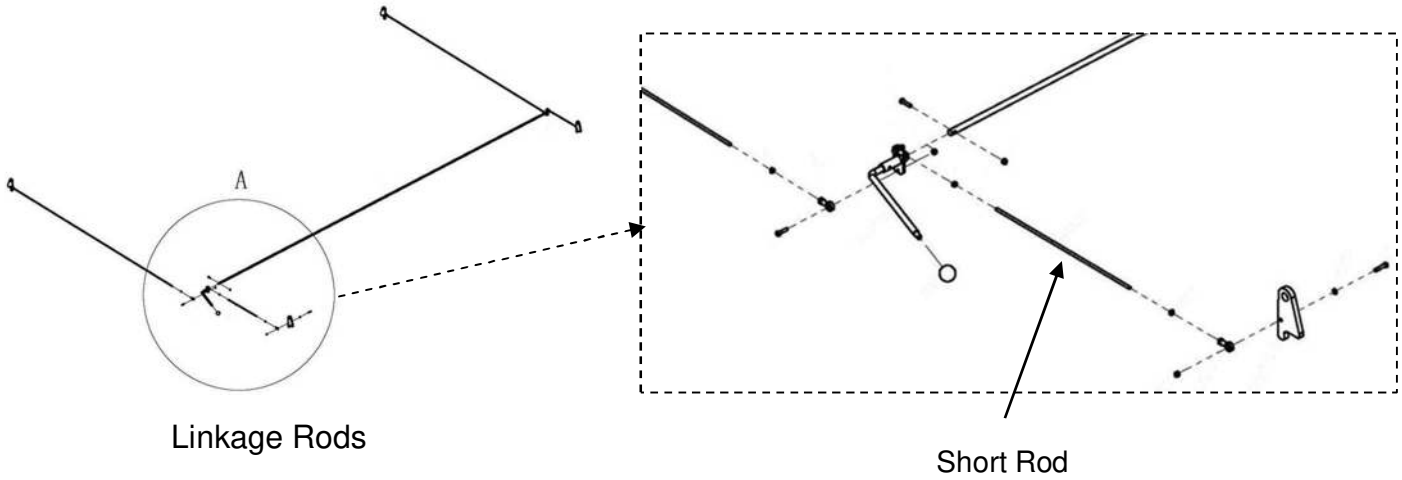

Fig. 4

10. If you have means for securely lifting the Crossbeam, lower it into the tops of the Columns. If not, the Columns will have to be placed horizontally, in order to install the Crossbeams into the Columns. Then, the entire end structure (two columns and crossbeam) will need to be stood up as one.

11. Unpack the Lock Ladders (#11) (Fig. 5) from the package and slide them into the precut slot on the Rub Blocks (#67) inside each column. After removing the top Nut from the Lock Ladder, you are ready to install the Top Caps A&B (#10 & #65) on the columns.

12. <u>Be aware of the offset hole in column's Top Caps. Arrange Top Caps so that the cable mounting holes are closest to the runways</u>. Use provided Bolts, Nuts, Washers and Lock Washers to install Top Caps, as shown in Fig.5 & 5b.

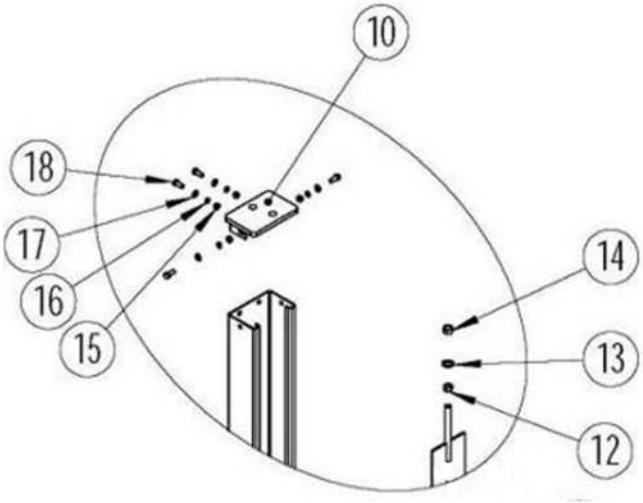

Fig. 5b

13. Secure Top Cap and Lock Ladder assemblies together with Washer (#13) and Nut (#14) as shown in Fig 5b. ***<u>Note:</u> Ensure Jam Nut (#12) is positioned below Top Caps***. Position the Crossbeams at the second lowest locking position on all columns.

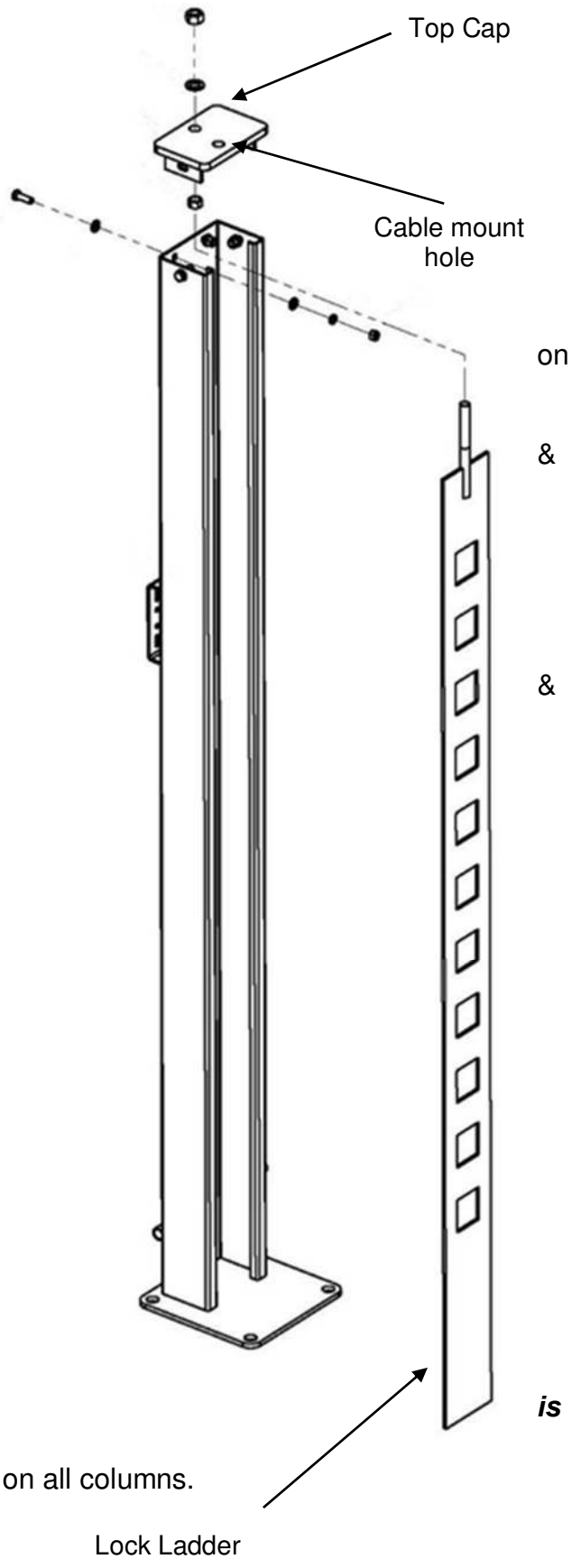

Fig. 5

14. Stand up and arrange the two end structures (Columns & Crossbeams) so that the outside of the Crossbeam rail to the outside of the other Crossbeam rail measures 188.5". Compare the measurements from the left and the right until they are diagonally within 1/2". ***Note:*** ***The ½" variance will help in mounting the runways later.***

15. Lift and position each Runway into place and secure to top of Crossbeams with the provided Hex Bolts (#24), Lock Washer (#25), Flat Washer (#26), as shown in Fig. 6. The lift will square itself as you further assemble it.

Note: ***Ensure to install the 'offside' Sub Runway opposite from the Main side Runway and Power unit Column as shown in Fig.6.***

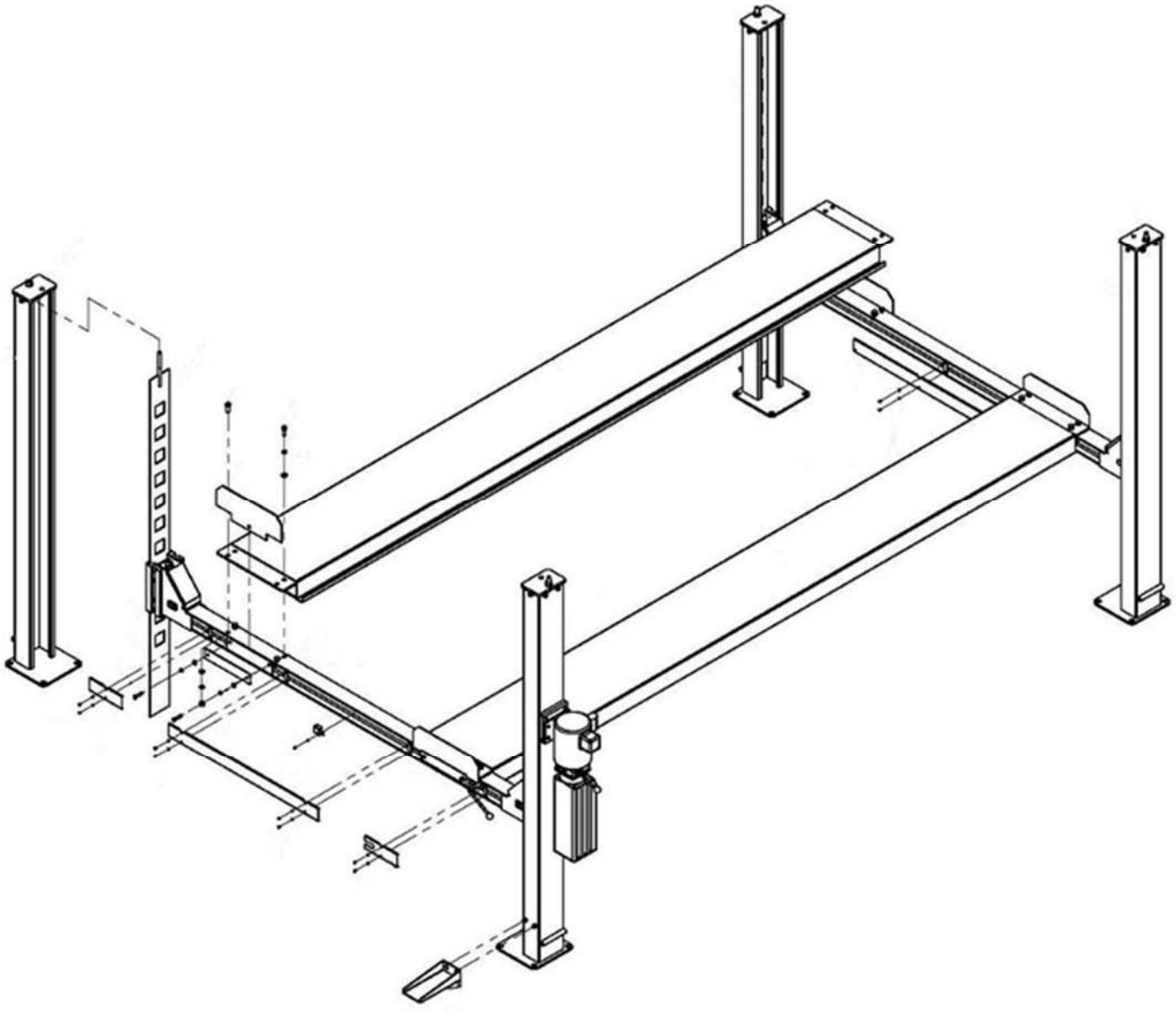

Fig. 6

16. Begin cable routing installation to Column Top Caps by first ensuring the pre-installed steel Cables are properly routed around each Cable Sheave and are not in a bind. ***Note:*** ***if Cable(s) comes off the Cable Sheave, it will be required to remove the Cable Sheave assembly to reinstall the Cable, due to welded cable guide brackets.***

17. Pull the slack for each Cable from the corner ends of the Mainside Runway and route the appropriate Cable(s) to each Column Top Caps, while ensuring that the Plastic Cable Pulley (#95) is between the Cable and the Lock Ladder as shown in Fig.7. This will allow the secondary Slack Cable Lock to function properly. See Fig.7 below for Cable routing installation.

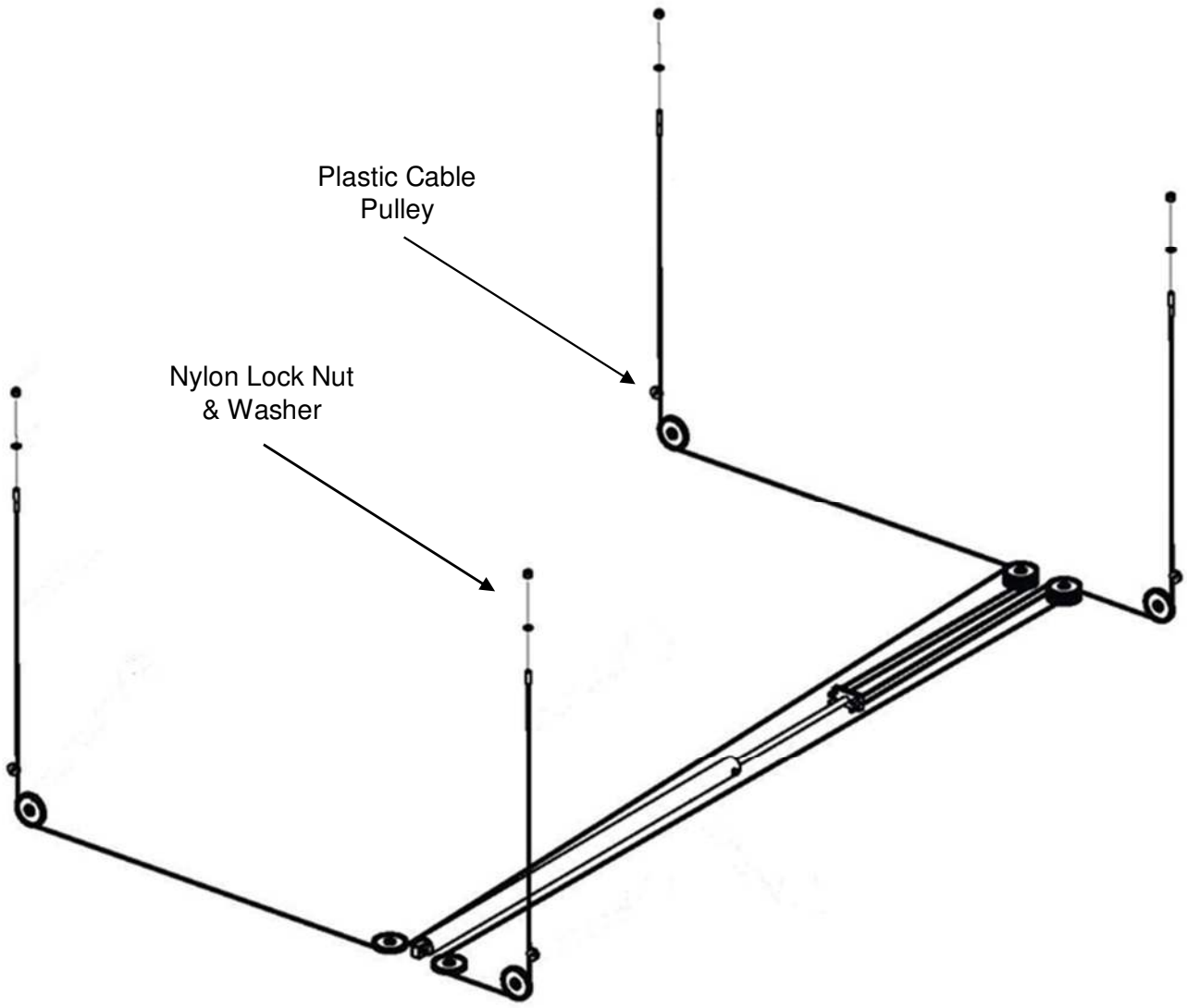

Fig. 7

18. Install Lock Rods & Linkage components per the drawing Fig.8. Also, install the Crossbeam Bracket (#96) to middle / outside of each Crossbeam and secure with the provided Hardware shown in Fig.6. ***Note:*** ***Crossbeam Linkage Rods may be pre-installed to Crossbeams. Also, ensure pre-installed T-Bar 'linkage' Rod is properly routed through guide ring weldments located on the underside of the Mainside Runway.***

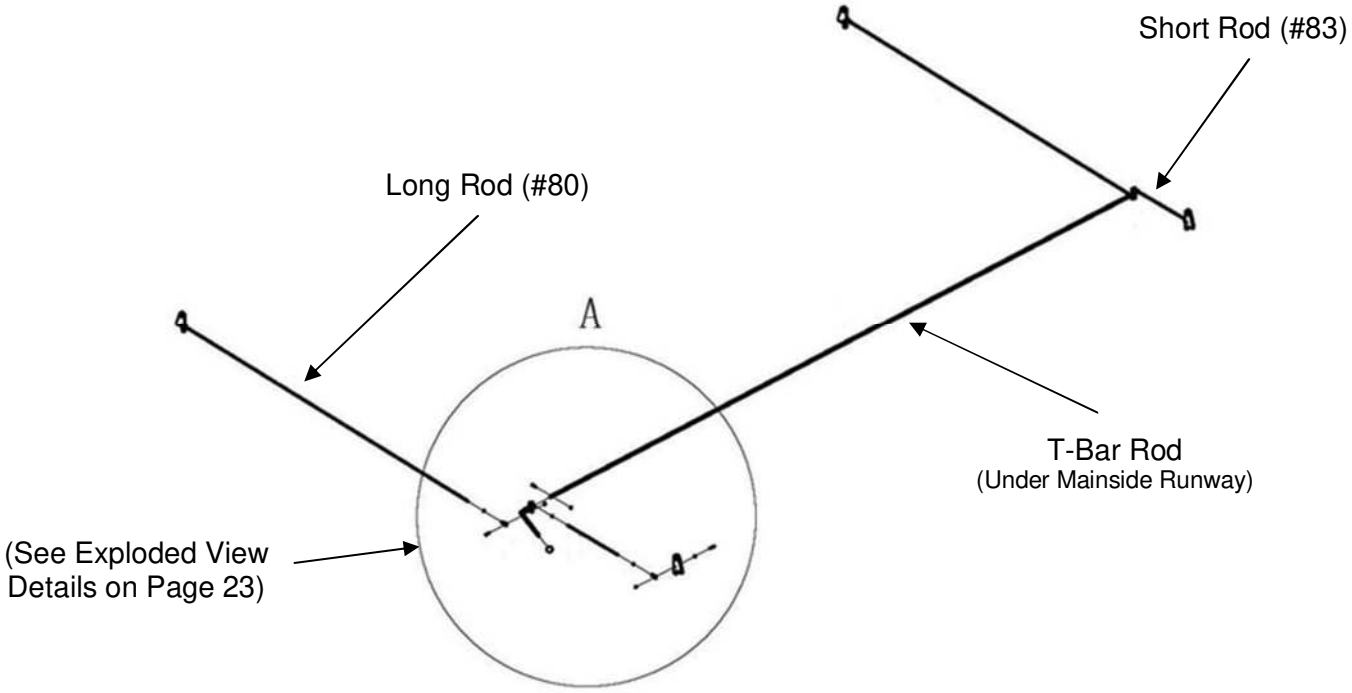

Fig. 8

19. Mount the Power Unit (#8) to the Mainside Column with the attached mounting bracket using the Hardware provided, shown in Fig.9. Once mounted, fill the Power Unit reservoir tank with hydraulic fluid. Now, install the 90 degree Hydraulic Fitting (#44) to the high pressure port on the Power Unit. Connect the electrical power to the Power Unit.

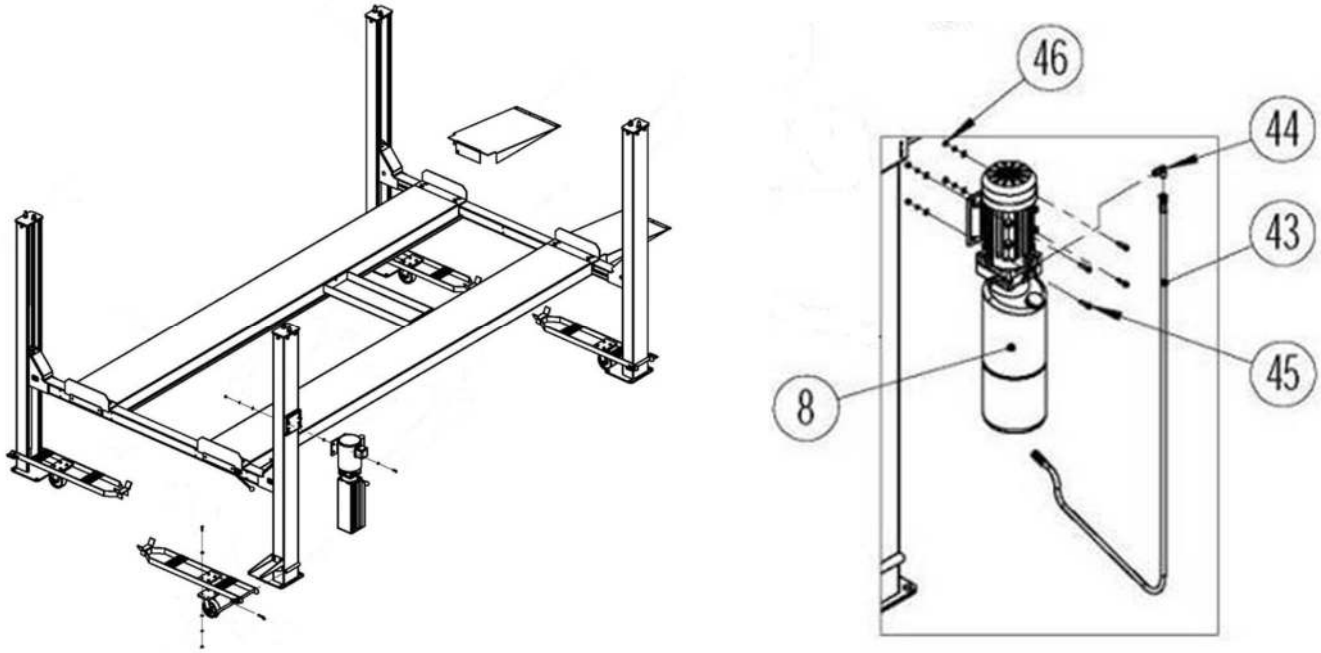

Fig. 9

20. Install the `wire braded_ Hydraulic Hose (#43) to the Fitting on the side of the Main side Runway and attach the other end to the 90 degree Fitting on the Power Unit as shown in Fig.2.

21. Now raise the complete unit (Lift) and set at one of the bottom lock positions. Place level on crossbeam.

22. Tighten Lock Ladder Rod Nut (#14) located on the top of each Column. This will raise the corner of the lift to adjust for leveling. Each Column has this adjustment. Adjust the proper columns to level the lift. Place a level on each runway and crossbeam and check for proper levelness.
    Note: ***You may have to loosen the Jam Nut under the Top Cap to make adjustments.***

23. After leveling is complete, tighten the Jam Nut on the Lock Ladder underneath the Top Cap on each post. This will secure the Lock Ladder in position.

24. Raise lift off all locks until cables are supporting the lift. Adjust the Cable's Nylon Lock Nut as shown in Fig 7, located on the top of each post until lift is level on crossbeams and runways. This will ensure the lift travels up and down level.
    Note: ***You may need to use locking pliers to hold the Cable from turning when adjusting the Nylon Nut. Make sure that threads engage through the nylon on each Nylon Nut.***

25. Install Crossbeam Cover panels (#68, #69, #70 & #71) on both sides of Crossbeam. Also install the Plastic drip Board (#20 & #21) into the bracket slots on the underside of the Mainside Runway.

26. Install Cover Plates (#55) to each end of Runways. Also insert Wheel Stops (#54) at front of Lift, as shown below in Fig.10.

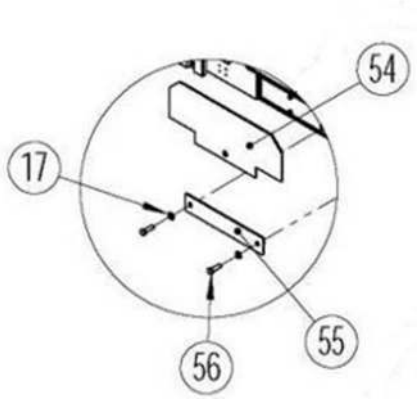

Fig. 10

27. Install drive-on Ramps (#7) at rear of Lift. Also install and Foot Plate (#19) on the bottom of Power Unit Column.

28. Install the Jack / Tool Tray & Drip Trays between the Runways.

NOTE: ***Ensure to lubricate ALL Cable Sheaves, Bearings and Shafts with grease prior to operating Lift.***

The Lift installation is now complete.

CASTER KIT ASSEMBLY INSTALLATION

1. Raise the Lift two to four feet high.

2. Assemble Caster assemblies as shown below.

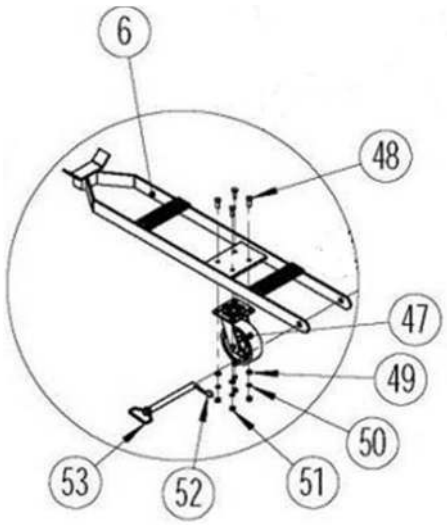

3. Position each of the four Caster assemblies below the Crossbeam rails, as shown on page 6 and on Fig. 9.

4. Install the four Pivot Pins (#53) and Hairpin Cotter Pins (#52) to secure Caster assembly to each Column.

5. Lower the Lift confirming that the Caster assemblies engage the underside of Crossbeams and all four Columns rise to clear the floor.



CAUTION: DO NOT maneuver Lift with Casters, while vehicle is on Lift.

Read Safety & Operation Instructions before operating Lift.

FOUNDATION and ANCHORING REQUIREMENTS

1. Concrete shall have compression strength of at least 3,000 PSI and a minimum thickness of 4-1/4˝ in order to achieve a minimum anchor embedment of 3-1/4˝. NOTE: When using the standard supplied 3/4˝ x 5-1/2˝ long anchors, if the top of the anchor exceeds 2-1/4˝ above the floor grade, you DO NOT have enough embedment.
2. Maintain a 6˝ minimum distance from any slab edge or seam. Hole to hole spacing should be a minimum 6-1/2˝ in any direction. Hole depth should be a minimum of 4-1/4˝.
3. DO NOT install on asphalt or other similar unstable surface. Columns are supported only by anchoring to floor.
4. Using the horseshoe shims provided, shim each column base as required until each column is plumb. If one column has to be elevated to match the plane of the other column, full size base shim plates should be used. Torque anchors to 130 ft-lbs. Shim thickness MUST NOT exceed 1/2˝ when using the 5-1/2˝ long anchors provided with the lift.
5. If anchors do not tighten to 130 ft-lbs. installation torque, replace the concrete under each column base with a 2ˇx 2ˇx 6˝ thick 3,000 PSI minimum concrete pad keyed under and flush with the top of existing floor. Allow concrete to cure before installing lifts and anchors (typically 2 to 3 weeks).

ANCHORING TIPS

1. Use a concrete hammer drill with a carbide tip, solid drill bit the same diameter as the anchor, 3/4˝ - (.775 to .787 inches diameter). Do not use excessively worn bits or bits which have been incorrectly sharpened.
2. Keep the drill in a perpendicular line while drilling.
3. Let the drill do the work. Do not apply excessive pressure. Lift the drill up and down occasionally to remove residue to reduce binding.
4. Drill the hole to depth of 2˝ deeper than the length of anchor. NOTE: Drilling thru concrete (recommended) will allow the anchor to be driven thru the bottom of foundation if the threads are damaged or if the lift will need to be relocated.
5. For better holding power blow dust from the hole.
6. Place a flat washer and hex nut over threaded end of anchor, leaving the nut almost flush with the top of the anchor bolt. Carefully tap anchor into hole. Do not damage threads. Tap anchor into the concrete until nut and flat washer are against base plate. Do not use an impact wrench to tighten! Tighten the nut, two or three turns on average after the concrete has cured (28-day cure). If the concrete is very hard only one or two turns may be required.

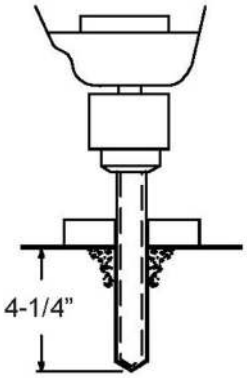

Drill holes using 3/4˝ carbide tipped masonry drill bit per ANSI standard B94.12.1977

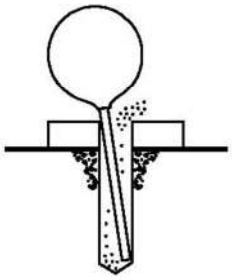

Clean hole.

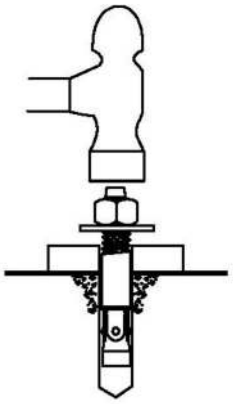

Run nut down just below impact section of bolt. Drive anchor into hole until nut and washer contact base.

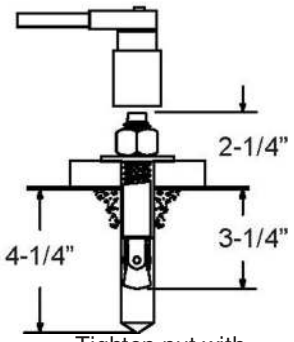

Tighten nut with Torque wrench to 130 ft.-lbs.

SAVE THESE INSTRUCTIONS

SAFETY INSTRUCTIONS

When using your garage equipment, basic safety precautions should always be followed, including the following:

- Read all instructions
- Care must be taken as burns can occur from touching hot parts.
- Do not operate equipment with a damaged cord or if the equipment has been dropped or damaged - until it has been examined by a qualified service person.
- Do not let a cord hang over the edge of the table, bench, or counter or come in contact with hot manifolds or moving fan blades.
- If an extension cord is necessary, a cord with a current rating equal to or more than that of the equipment should be used. Cords rated for less current than the equipment may overheat.
- Always unplug equipment from electrical outlet when not in use. Never use the cord to pull the plug from the outlet. Grasp plug and pull to disconnect.
- Let equipment cool completely before putting away. Loop cord loosely around equipment when storing.
- To reduce the risk of fire, do not operate equipment in the vicinity of open containers of flammable liquids (gasoline).
- Adequate ventilation should be provided when working on operating internal combustion engines.
- Keep hair, loose clothing, fingers, and all parts of body away from moving parts.
- To reduce the risk of electric shock, do not use on wet surfaces or expose to rain.
- Use only as described in this manual. Use only manufacturer's recommended attachments.
- ALWAYS WEAR SAFETY GLASSES. Everyday eyeglasses only have impact resistant lenses, they are not safety glasses.

SAFETY PROCEDURES

- Never allow unauthorized persons to operate lift. Thoroughly train new persons/employees in the use, operation and care of lift.
- **CAUTION! Power unit operates at high pressure.**
- Remove passengers before raising vehicle.
- Prohibit unauthorized persons from being in shop area while lift is in use.
- Total lift capacity is 9,000 lbs (4,500 lbs. per axel). Do not exceed this capacity.
- Prior to lifting vehicle, walk around the lift and check for any objects that might interfere with the operation of lift and safety latches; tools, air hoses, shop equipment.
- When approaching the lift with a vehicle, make sure to center the vehicle between the columns. Slowly drive the vehicle up with someone outside the vehicle guiding the driver.
- Prior to lowering vehicle, walk around the lift and check for any objects that might interfere with the operation of lift and safety latches; tools, air hoses, shop equipment.
- Slowly drive the vehicle on and off of the lift. Have someone outside the vehicle guide the driver.

CAUTION!
LUBRICATE ALL CABLE SHEAVES, BEARINGS, AND SHAFTS WITH GREASE PRIOR TO OPERATING THE LIFT. LUBRICATE ALL ON AN ANNUAL BASIS.

Motors and all electrical components are not sealed against the weather and moisture. Install this lift in a protected indoor location. Failure by the owner to provide the recommended shelter could result in unsatisfactory lift performance, property damage, or personal injury.

OPERATION INSTRUCTIONS

NOTE: ALWAYS CHOCK WHEELS AND SET PARKING BRAKE BEFORE LIFTING VEHICLE!

Read Safety & Operating Instructions procedures in Manual completely before operating lift.

- Properly maintain and inspect lift in accordance to owner's manual.
- Do not operate a lift that is damaged or in need of repair.
- Allow only authorized personnel in the lift bay.
- Stay clear of lift when raising or lowering (no riders).
- Keep hands and feet away from pinch points at all times.
- Never override the lift operating and safety controls.
- If a vehicle is suspected of falling, clear area immediately.
- Do not rock vehicle while positioned on lift.
- Always use safety jack stands when removing or installing heavy components.

Vehicle Loading:

- Position vehicle on lift runways by having another person guide you onto the runways. Check for proper weight distribution (center of gravity should be evenly distributed between columns).
- Set vehicle parking brake and chock tires to prevent vehicle movement.
- Use caution before lifting pickup trucks, sport utility and other type vehicles. The individual axle weight capacity should not exceed 1/2 of lift's capacity.
- Make sure vehicle is neither front nor rear heavy.

Raising Lift:

- Push up switch to raise lift until runways clear the floor.
- Stop and check for vehicle movement and vehicle weight distribution. If secure, raise to desired height.
- Always lower the lift to the nearest lock position by pressing the lower lever to relieve the hydraulic pressure and let the latch set tight in a lock position.
- Never work under a lift that is not in the locked position.

Lowering Lift:

- Clear all obstacles from under lift and vehicle, and ensure only lift operator is in the lift area.
- Stay clear of lift and raise the lift off the safety locks.
- Pull Safety Latch Release handle and press the Power Unit's Lower Lever to begin descent.
- Ensure lift is fully lowered, and having another person guide you, carefully unload the lift by driving off of the lift runways.

CAUTION!

PAY ATTENTION TO THE LOWERING SPEED OF ALL FOUR CORNERS. MAKE SURE THEY ARE MOVING DOWN AT THE SAME SPEED. STOP LOWERING THE LIFT BY RELEASING THE LOWERING LEVER ON THE POWER UNIT AND MOVING THE LOCK LEVER TO THE LOCK POSITION IF ANY CORNER STOPS MOVING OR IS SLOWER IN DESCENT. ALWAYS LOCK THE LIFT BEFORE GOING UNDER THE VEHICLE. NEVER ALLOW ANYONE TO GO UNDER THE LIFT WHEN RAISING OR LOWERING.

NOTE: It is normal for an empty lift to lower slowly - it may be necessary to add weight. Read and adhere to all WARNING, CAUTION and SAFETY INSTRUCTIONS labels on lift.

PREVENTIVE MAINTENANCE SCHEDULE

The periodic Preventive Maintenance Schedule given is the suggested minimum requirements & minimum intervals; accumulated hours or monthly period, whichever comes sooner.

Periodic maintenance is to be performed on a daily, weekly, and yearly basis as given in the following paragraphs.

Do not modify the lift in any manner without the prior written consent of the manufacturer.

WARNING!! Failure to perform the daily pre-operational check can result in expensive property damage, lost production time, serious personal injury, and even death. The safety latch system must be checked and working properly before the lift is put to use.

Failure to heed this warning can result in death or serious injury, or damage to equipment. If you hear a noise not associated with normal lift operation or if there is any indications of impending lift failure CEASE OPERATION IMMEDIATELY! Inspect, correct and/or replace parts as required.

Daily Pre-Operation Check (8-Hours)

- Check safety lock audibly and visually while in operation
- Check safety latches for free movement and full engagement with rack.
- Check hydraulic connections, and hoses for leakage.
- Check cables connections bends, cracks-and for loose fittings.
- Check for frayed cables in both raised and lowered position.
- Check snap rings at all rollers and sheaves.
- Check bolts, nuts, and screws and tighten if needed.
- Check wiring & switches for damage.
- Check floor for stress cracks near columns.
- Check Lubrications on cable sheaves and shafts.

Weekly Maintenance (every 40-Hours)

- IF LIFT IS ANCHORED TO FLOOR - Check anchor bolts torque to 130 ft-lbs for the ¾ in. anchor bolts. Do not use an impact wrench to tighten anchor bolts.
- Check floor for stress cracks near columns
- Check hydraulic oil level.
- Check and tighten bolts, nuts, and screws.
- Check all cable sheaves/assembly for free movement or excessive wear on cable sheave shaft.

Yearly Maintenance

- Lubricate the cable sheave shafts at least once a year, after the lift is in service.
- Check for excessive wear of cable. Replace them if necessary.
- Change the hydraulic fluid - operating temperature, type of service, contamination levels, filtration, and chemical composition of fluid should be considered. If operating in dusty environment shorter interval may be required.

TROUBLESHOOTING

The common problems that may be encountered and their probable causes are covered in the following paragraphs:

- **Motor Does Not Operate:**
  1. Breaker or fuse blown
  2. Faulty wiring connections
  3. Defective up button

WARNING!! Failure to properly relieve pressure in the following steps can cause injury to personnel.

- **Motor Functions but Lift Will Not Rise:**
  1. Power Unit is not priming correctly. (See Power Unit Prime Procedure on next page.)
  2. A piece of trash is under release :down˘valve. Push handle down and push the up button at the same time. Hold for 10-15 seconds. This should flush trash from valve.
  3. Remove the check valve cover and clean ball and seat.
  4. Oil level too low. Oil level should be at the MAX fill line located on the reservoir tank, when lift is fully lowered. Ensure to lower lift to relieve all hydraulic pressure and add oil as required.

- **Oil Blows out Breather of Power Unit:**
  1. Oil reservoir overfilled. Relieve all pressure and siphon out hydraulic fluid until at a proper level.
  2. Lift lowered too quickly while under a heavy load. Lower the lift slowly under heavy loads.

- **Motor Hums and Will Not Run:**
  1. Lift overloaded. Remove excessive weight from lift.

     WARNING!! The voltages used in the lift can cause death or injury. In the following steps, make sure that a qualified electrician is used to perform maintenance.

  2. Faulty wiring
  3. Bad capacitor
  4. Low voltage

- **Lift Jerks Going Up and Down:**
  1. If the lift jerks while going up and down, it is usually a sign of air in the hydraulic system. Raise lift all the way to top and return to floor. Repeat 4-6 times, ensuring not overheat power unit.

- **Oil Leaks:**
  1. Power Unit: if the power unit leaks hydraulic oil around the tank-mounting flange check the oil level in the tank. The level should be two inches below the flange of the tank. A screwdriver can be used as a `dipstick_.
  2. Cylinder / Piston Rod: the rod seal of the cylinder is out. Rebuild or replace the cylinder.
  3. Cylinder / Vent: the piston seal of the cylinder is out. Rebuild or replace the cylinder.

- **Lift makes Excessive Noise / Vibrates:**
  1. Cross beam ends are rubbing the columns. Readjustment needed.
  2. Cylinder too tight, load lift half capacity and cycle up and down a few times to break in.
  3. May have excessive wear on cable sheaves or shafts. Replace them.

POWER UNIT PRIMING PROCEDURE

THE PROBLEM: Power unit runs fine but will not pump any fluid.

WARNING!! Failure to properly relieve pressure in the following steps can cause injury to personnel.

Step 1 ¯ Locate the check valve, the flush plug to the left of the lowering valve.

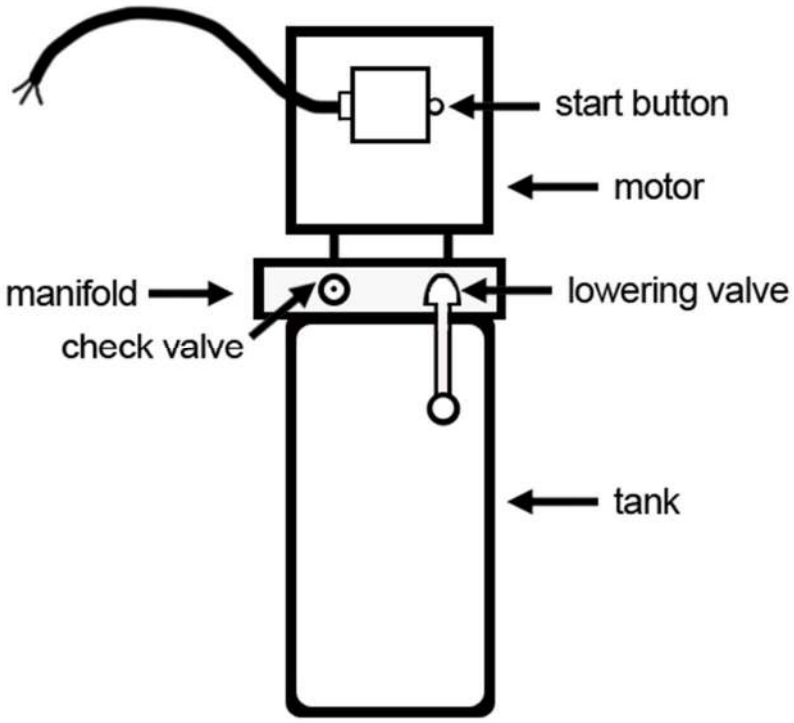

Step 2 ¯ Using an Allen wrench and shop towel ¯ with shop towel in place to catch fluid ¯ loosen the check valve plug 2 ½ turns to allow it to leak.

Step 3 ¯ Push the START button for one second, then release for three seconds. Repeat these steps until unit starts pumping fluid.

Step 4 ¯ Tighten the check valve plug.

YOUR POWER UNIT SHOULD BE PRIMED

LATCH & CABLE INSPECTION / ADJUSTMENTS

WARNING!! Failure to perform routine inspections can lead to reduced service life, which could result in property damage and/or personal injury. Check locking latches for proper operation. Inspect for worn or missing parts. Replace worn or damaged parts and adjust as required.

- **Latch Mechanism Inspection**

  Latches and Latch Bar Alignment:
  - Check for proper latch operation on all four corners.
  - Observe locking latches during lift operation to ensure that all latches line up with slots in latch bar located in all four columns. If not, relocate and/or re-shim columns.
  - Check slack cable devices for proper operation. Inspect for worn or missing parts. Replace worn or damaged parts as required.
  - Observe both locking latches and slack cable devices during lift operation to ensure that all latches line up with slots in latch bar located in all four columns.

- **Leveling – Cable & Lock Ladder Adjustments**

  A. Initial Adjustment
  - Adjust cable with lift fully lowered. Loosen jam nut and tighten nut on cable stud on top of column until yoke end is raised 1/4˝ (6.4 mm) and back off nut one turn. Retighten jam nut.
  - Repeat for all four cables.

  B. Final Adjustment
  1. Load a typical vehicle on lift.
  2. Raise lift as high as it will travel (full height). You should hear the locking latches click through all latch slots simultaneously.
  3. Lower lift onto top latch position.
  4. Check clearance, starting with the right front column, use a straight edge to mark the position of the yoke bottom on the column.
  5. Raise lift to full height again. Mark second position. If gap between two marks is less than 2˝, adjust locking latch bar to reach clearance of 2˝. Repeat for the other three columns.
  6. Adjust locking latch bar adjusting nut so that the bottom of the top most latch bar slot is at least 2˝ below locking latch. After adjustment, tighten jam nut underneath column top plate,
  7. If entire 2˝ clearance cannot be attained by adjusting the locking latch bar, adjust the cable. Turn cable adjusting nut to raise the locking latch 2˝ above bottom of latch bar slot. Tighten cable jam nut.
  8. Lower lift and remove vehicle.
  9. Raise the lift to full height. LISTEN and WATCH as the first locking latch clicks into place. Synchronize the other three columns with this column by adjusting their cables so all four latches click at same time. Tighten jam nuts.

NOTE: ***When making changes to adjustment nuts on cable end or latch bar stud, always leave at least two threads showing between nut and stud end. Latches may not click in at the same time when vehicle is being raised but should be close. Be sure all four corners have passed the locking latch bar slot before lowering lift on locking latches.***

EXPLODED VIEW #1

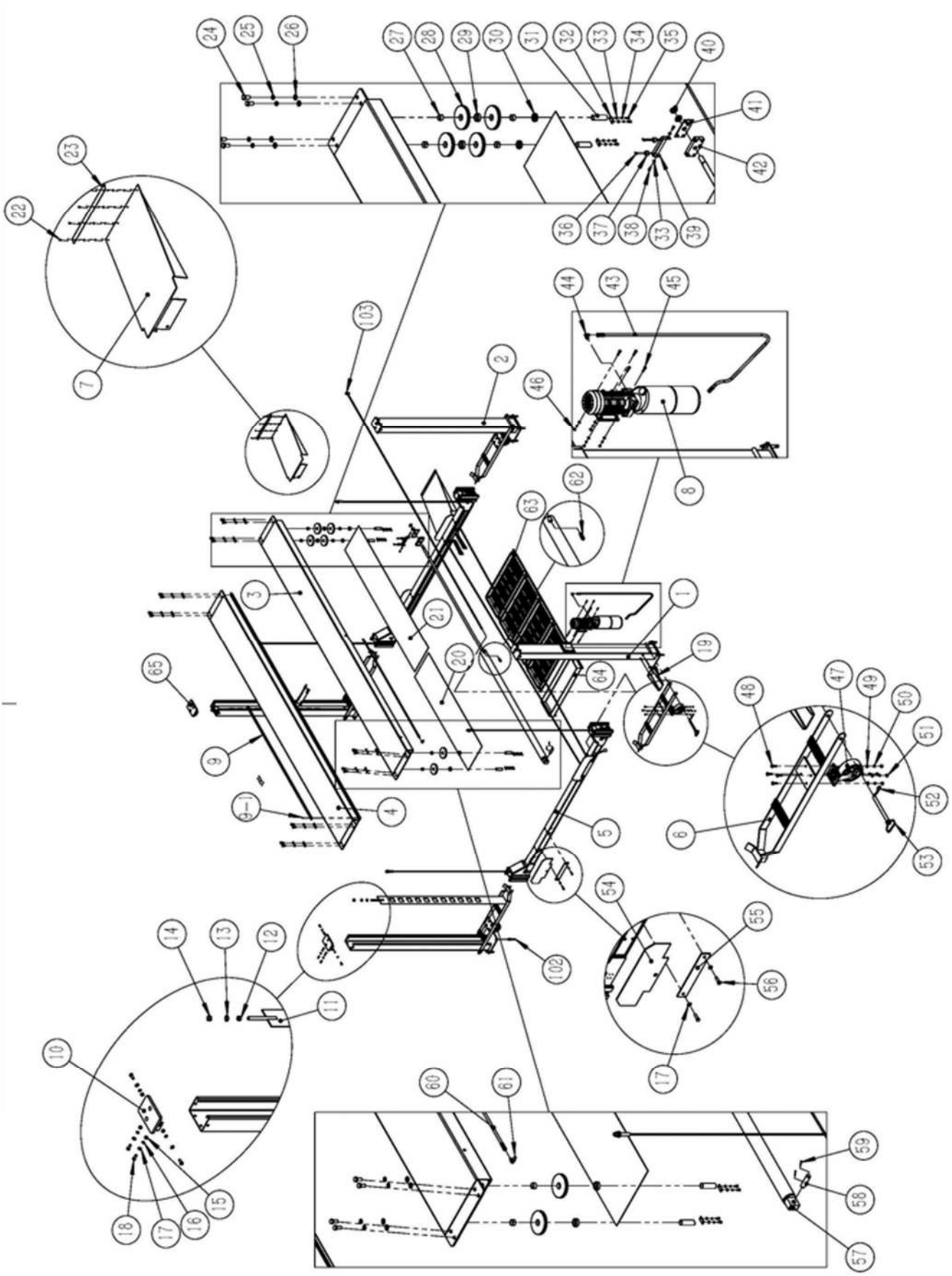

EXPLODED VIEW #2

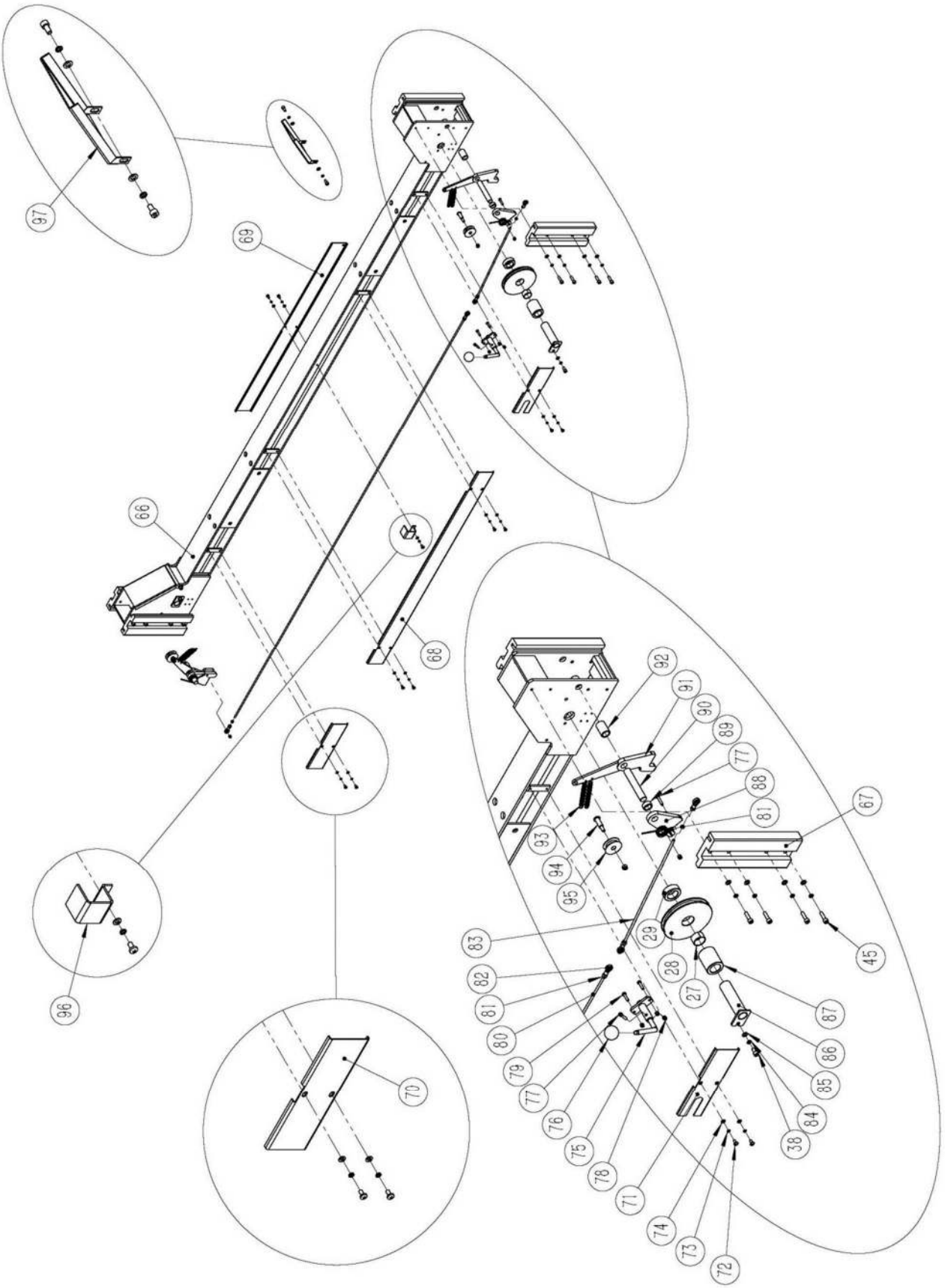

EXPLODED VIEW #3

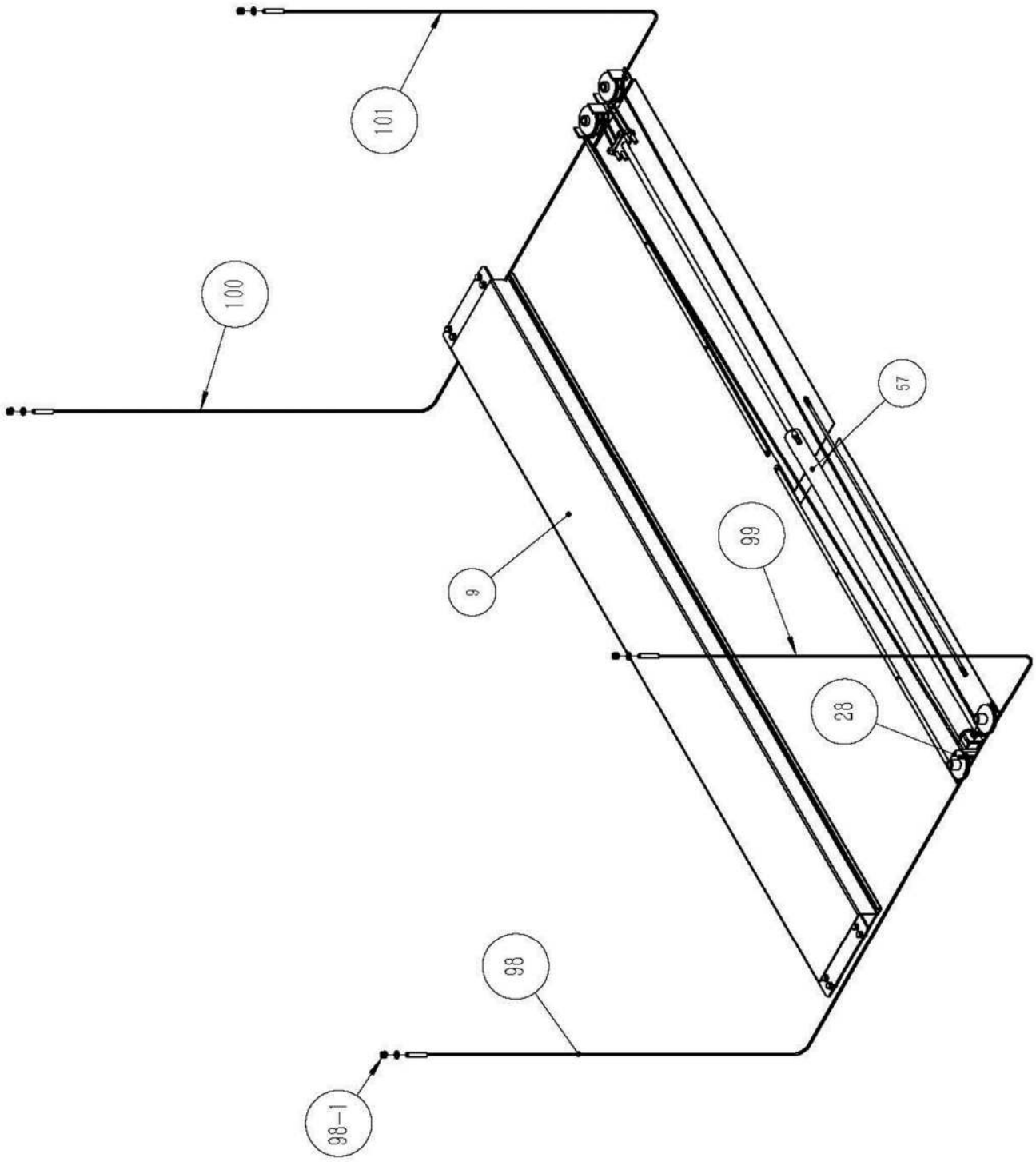

PARTS LIST
57309

ITEM	Tux P/N	M-Ref P/N	DESCRIPTION	QTY
1	FP9KDX-001	KY-8440T-1000	Main Column	1
2	FP9KDX-002	KY-8440T-1000A	Sub Column	3
3	FP9KDX-003	KY-8440T-3000	Mainside Runway	1
4	FP9KDX-004	KY-8440T-3000A	Sub Runway	1
5	FP9KDX-005	KY-8440T-2000C	Crossbeam Kit	2
6	FP9KDX-006	KY-8440T-7000-2	Caster Frame	4
7	FP9KDX-007	KY-8440T-4000	Ramp	2
8	PU-110V-L-K		Power Unit 110VAC	1
9	FP9KDX-009	KY-8440T-3000-26	Sliding Slot Plate	4
9-1	FP9KDX-009.1		Screw, M6x10mm	16
10	FP9KDX-010	KY-8440T-1000-4A	Top Cap B	2
11	FP9KDX-011	KY-8440T-1000-6	Lock Ladder	4
12	FP9KDX-012	KY-8440T-1000-7	Jam Nut, M20x14mm	4
13	FP9KDX-013		Flat Washer, M20	8
14	FP9KDX-014		Nut, M20	4
15	FP9KDX-015		Nut, M12	16
16	FP9KDX-016		Lock Washer, M12	16
17	FP9KDX-017		Flat Washer, M12	32
18	FP9KDX-018		Screw, M12x30mm	16
19	FP9KDX-019	KY-8440T-1000-8	Foot Step	1
20	FP9KDX-020	KY-8440T-3000-24	Drip Board, Cover A	1
21	FP9KDX-021	KY-8440T-3000-25	Drip Board, Cover B	1
22	FP9KDX-022		Screw, M5x12mm	8
23	FP9KDX-023	KY-8440T-4000-2	Safety Strip, Ramp	2
24	FP9KDX-024		Bolt, M18x40mm	16
25	FP9KDX-025		Lock Washer, M18	16
26	FP9KDX-026		Flat Washer, M18	16
27	FP9KDX-027		Bearing	10
28	FP9KDX-028	KY-8440T-2000-6	Cable Sheave	10
29	FP9KDX-029	KY-8440T-3000-12	Middle, Sheave Spacer	8
30	FP9KDX-030	KY-8440T-3000-13	Lower, Sheave Spacer	2
31	FP9KDX-031	KY-8440T-3000-15A	Sheave Pin-A (Double)	2
31.1	FP9KDX-031	KY-8440T-3000-15B	Sheave Pin-B (Single)	2
32	FP9KDX-032	KY-8440T-2000-17	Locating Plate	4
33	FP9KDX-033		Flat Washer, M8	8
34	FP9KDX-034		Lock Washer, M8	8
35	FP9KDX-035		Screw, M8x20mm	8
36	FP9KDX-036		Screw, M8x20mm	4
37	FP9KDX-037	KY-8440T-3000-16	Nylon Guide Block	2

38	FP9KDX-038		Screw, M8x16mm	14
39	FP9KDX-039	KY-8440T-3000-20	Guide Block Frame	1
40	FP9KDX-040		Piston Rod Nut, M25	2
41	FP9KDX-041	KY-8440T-3000-17	Cable Lock Plate B	1
42	FP9KDX-042	KY-8440T-3000-14	Cable Lock Plate A	1
43	FP9KDX-043	SY-8435T-6000-6	:Wire Braded˘Hose 88.58"	1
44	FP9KDX-044	KY-8440T-6000-3	90 Hydra Fitting, PU	1
45	FP9KDX-045		Screw, M8x30mm	36
46	FP9KDX-046		Nut, M8	4
47	FP9KDX-047	SY-8435T-7000-3	Poly Caster	4
48	FP9KDX-048		Screw, M10x30mm	16
49	FP9KDX-049		Flat Washer, M10	32
50	FP9KDX-050		Lock Washer, M10	16
51	FP9KDX-051		Nut, M10	16
52	FP9KDX-052	SY-8435T-7000-1-4	Hairpin Cotter Pin	4
53	FP9KDX-053	KY-8440T-7000-1	Caster Frame Pin	4
54	FP9KDX-054	KY-8440T-3000-19	Wheel Stop Plate	4
55	FP9KDX-055	KY-8440T-3000-18	Cover Plate	4
56	FP9KDX-056		Screw, M12x40mm	8
57	FP9KDX-057	KY-8440T-6000-1	Cylinder	1
58	FP9KDX-058	KY-8440T-3000-11	Cylinder Pin	1
59	FP9KDX-059		Cotter Pin, M4x40mm	2
60	FP9KDX-060	KY-8440T-6000-2	Hose B, 78.15"	1
61	FP9KDX-061	P35BBD-6004	90 Hydra Fitting	1
62	FP9KDX-062	KY-8440T-6000-5	Hyd Fitting, Flow Control	1
63	FP9KDX-DT	KY-8440T-3000-22	Drip Tray, 39"W	4
64	FP9KDX-JT	KY-8440T-3000-21	Jack / Tool Tray	1
65	FP9KDX-065	KY-8440T-1000-4	Top Cap A	2
66	FP9KDX-066	KY-8440T-2000	Crossbeam	2
67	FP9KDX-067	KY-8440T-2000-18	Guide Block, Crossbeam	8
68	FP9KDX-068	KY-8440T-2000-23	Center Cover #2	2
69	FP9KDX-069	KY-8440T-2000-22	Center Cover #1	2
70	FP9KDX-070	KY-8440T-2000-20	End Cover #1	3
71	FP9KDX-071	KY-8440T-2000-21	Latch, End Cover #2	1
72	FP9KDX-072		Screw, M6x12mm	22
73	FP9KDX-073		Lock Washer, M6	22
74	FP9KDX-074		Flat Washer, M6	22
75	FP9KDX-075	KY-8440T-5000A	Release Handle, Short	1
76	FP9KDX-076	SY-8435T-5000-10	Plastic Knob	1
77	FP9KDX-077		Screw, M6x30mm	5
78	FP9KDX-078		Lock Nut, M6	13
79	FP9KDX-079		Screw, M6x25mm	8
80	FP9KDX-080	KY-8440T-5000-3	Long Rod, Crossbeam	2

81	FP9KDX-081		Nut, M6	8
82	FP9KDX-082	SY-8435T-5000-1	Swivel Joint	8
83	FP9KDX-083	KY-8440T-5000-2	Short Rod, Crossbeam	2
84	FP9KDX-084		Lock Washer, M8	4
85	FP9KDX-085		Flat Washer, M8	4
86	FP9KDX-086	KY-8440T-2000-7	Cable Sheave Shaft	4
87	FP9KDX-087	KY-8440T-2000-16	Spacer	4
88	FP9KDX-088	KY-8440T-2000-8	Main Lock Latch - A	4
89	FP9KDX-089	KY-8440T-2000-12	Middle, Position Spacer	4
90	FP9KDX-090	KY-8440T-2000-13	Latch Shaft	4
91	FP9KDX-091	KY-8440T-2000-9	Slack Cable, Latch-B	4
92	FP9KDX-092	KY-8440T-2000-12-1	Latch Shaft Spacer	4
93	FP9KDX-093	KY-8440T-2000-11	Spring, Slack Cable	8
94	FP9KDX-094	KY-8440T-2000-14-1	Latch-B Shaft	4
95	FP9KDX-095	KY-8440T-2000-14-2	Nylon Wheel, Slack Cable	4
96	FP9KDX-096	KY-8440T-2000-25	Rod Guide	2
97	FP9KDX-097	KY-8440T-2000-19	Cover Plate, Crossbeam	4
98	FP9KDX-098	KY-8440T-6000-4	Cable #3 (374.53" x 3/8")	1
99	FP9KDX-099	KY-8440T-6000-4	Cable #4 (315.47" x 3/8")	1
100	FP9KDX-100	KY-8440T-6000-4	Cable #2 (190.35" x 3/8")	1
101	FP9KDX-101	KY-8440T-6000-4	Cable #1 (131.50" x 3/8")	1
102	FP9KDX-102	163019-102	Anchor Bolt	16
103	FP9KDX-103	KY-8440T-5000B	Linkage Rod, Runway	1

LIMITED WARRANTY

Structural Warranty:

The following parts and structural components carry a five year warranty:

Columns	Arms	Uprights	Swivel Pins
Legs	Carriages	Overhead Beam	
Tracks	Cross Rails	Top Rail Beam	

Limited One-Year Warranty:

Tuxedo Distributors, LLC (Tuxedo) offers a limited one-year warranty to the original purchaser of Lifts and Wheel Service equipment in the United States and Canada. Tuxedo will replace, without charge, any part found defective in materials or workmanship under normal use, for a period of one year after purchase. The purchaser is responsible for all shipping charges. This warranty does not apply to equipment that has been improperly installed or altered or that has not been operated or maintained according to specifications.

Other Limitations:

This warranty does not cover:

1. Parts needed for normal maintenance
2. Wear parts, including but not limited to cables, slider blocks, chains, rubber pads and pulleys
3. Replacement of lift and tire changer cylinders after the first 30 days. A seal kit and installation instructions will be sent for repairs thereafter.
4. On-site labor

Upon receipt, the customer must visually inspect the equipment for any potential freight damage before signing clear on the shipping receipt. Freight damage is not considered a warranty issue and therefore must be noted for any potential recovery with the shipping company.

The customer is required to notify Tuxedo of any missing parts within 72 hours. Timely notification must be received to be covered under warranty.

Tuxedo will replace any defective part under warranty at no charge as soon as such parts become available from the manufacturer. No guarantee is given as to the immediate availability of replacement parts.

Tuxedo reserves the right to make improvements and/or design changes to its lifts without any obligation to previously sold, assembled or fabricated equipment.

There is no other express warranty on the Tuxedo lifts and this warranty is exclusive of and in lieu of all other warranties, expressed or implied, including all warranties of merchantability and fitness for a particular purpose.

To the fullest extent allowed by law, Tuxedo shall not be liable for loss of use, cost of cover, lost profits, inconvenience, lost time, commercial loss or other incidental or consequential damages.

This Limited Warranty is granted to the original purchaser only and is not transferable or assignable.

Some states do not allow exclusion or limitation of consequential damages or how long an implied warranty lasts, so the above limitations and exclusions may not apply. This warranty gives you specific legal rights and you may have other rights, which may vary from state to state.