TE-4

Four Post Vertical Reciprocating Conveyor

PROFESSIONAL PARKING SOLUTION PROVIDER!



WE PLAN , DESIGN, MANUFACTURE AND INSTALL...

TE-4

Four Post Vertical Reciprocating Conveyor

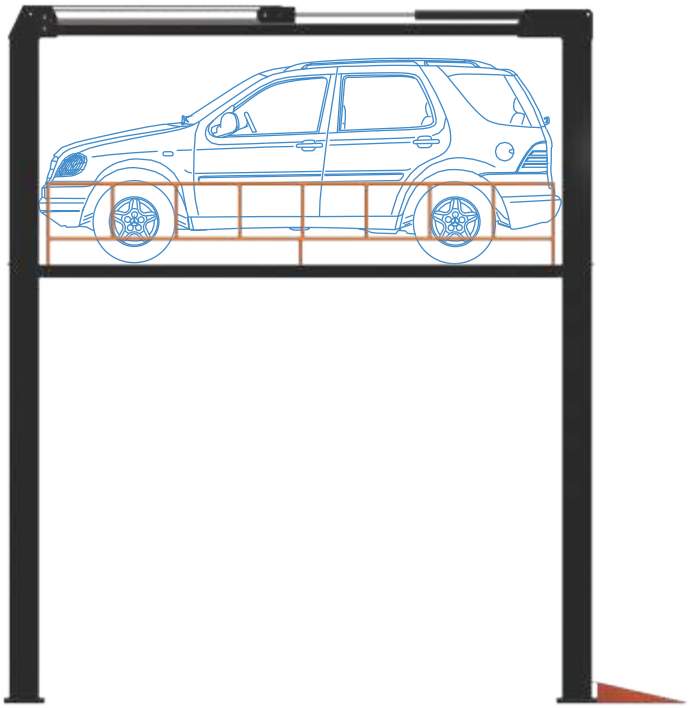

Introduction

TE-4(Vertical Reciprocating Conveyor) is a transportation conveyor moving car from one floor to another, it is a highly customized product, which could be customized according to customers' different requirements from lifting height, lifting capacity to platform size!

-TE-4 is a kind of car or goods lift, and industry use vertical table lift
-Self-standing and self-support structure
-Hydraulic cylinder + steel chains drive system
-High precision and stable hydraulic drive system
-Automatic shut-off if operator releases the button switch
-Double chain design for higher safety
-High density chains with longer service lift
-Remote control is optional
-Top quality diamond steel plate
-Hydraulic overloading protection available

General Parts

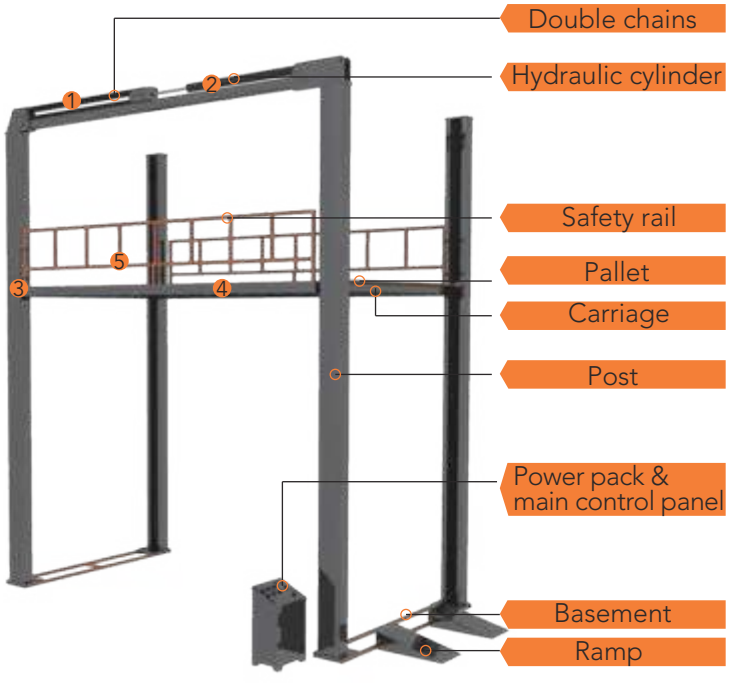

Safety Features

1. Double Chain
   -High density chains with longer service life



2. High precision
   -hydraulic drive system
3. Limit switch
   -To stop the power pack pumping when the platform reach the floors
4. Stable
   -145mm thickness platform
5. 900mm high safety rail

Specifications

Model	TE-4
Lifting capacity	2,000-10,000 kg*can be customized according to your requirement
Lifting height	2,000-15,000mm*can be customized according to your requirement
Platform length	2000mm-6000mm*can be customized according to your requirement
Platform width	2000mm-5000mm*can be customized according to your requirement
Platform material	Diamond steel sheet (standard) / 4mm Aluminum steel sheet (optional)
No. of level	according to your requirement
Drive mode	Hydraulic(cylinder with double steel chains)
Operation	button switch (standard) / remote controller (optional)
Power pack	4 kw hydraulic power pump
Lifting speed	4m/min
Safety devices	Mechanical anti-falling lock
Finishing	Paint spray
Color	according to your requirement

Reference Drawing

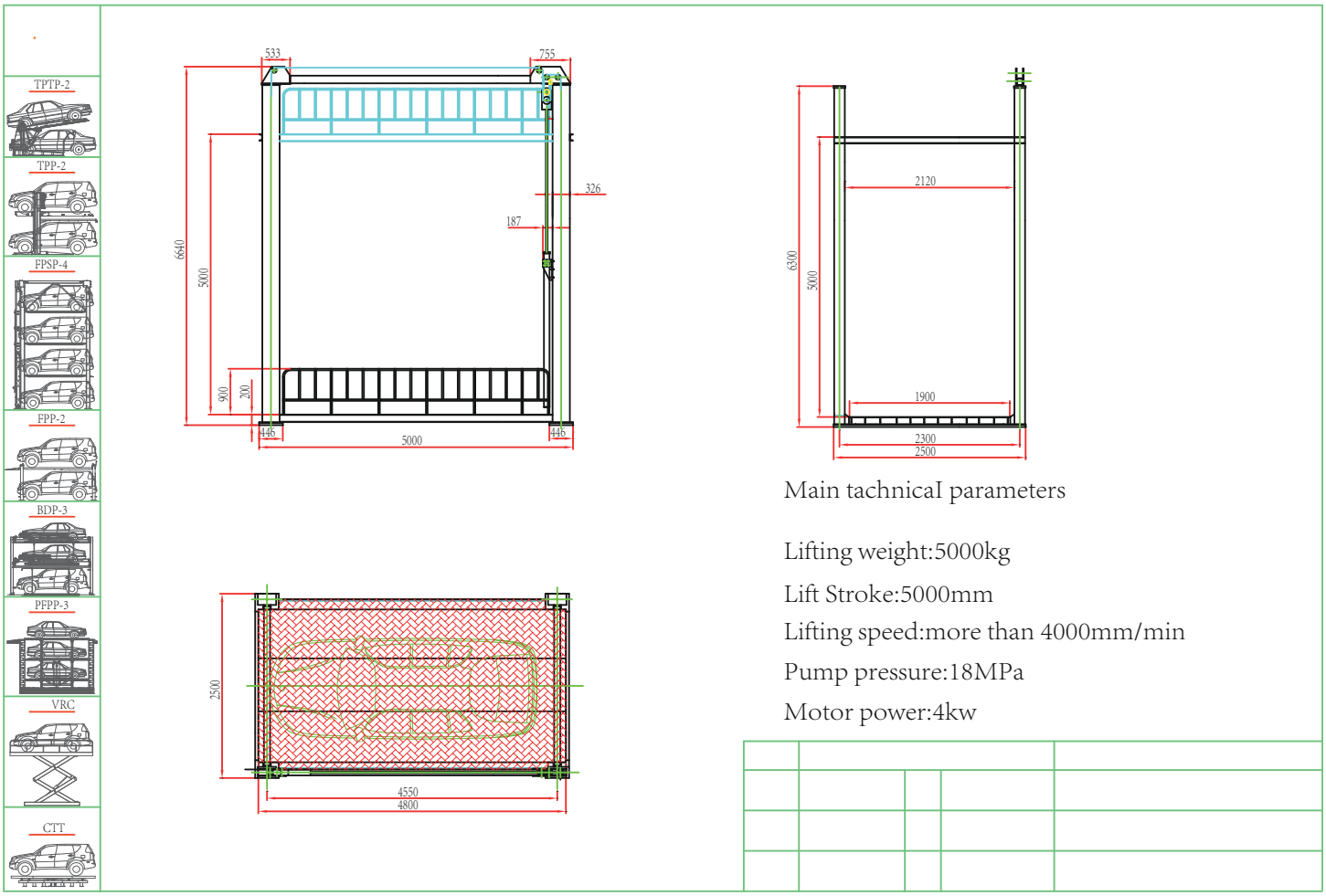

Main tachnicaI parameters

Lifting weight:5000kg

Lift Stroke:5000mm

Lifting speed:more than 4000mm/min

Pump pressure:18MPa

Motor power:4kw

Drawing above is just a sample, for specific project please contact our sales to confirm exact specifications and drawing.

Electric & Hydraulic System

Electric

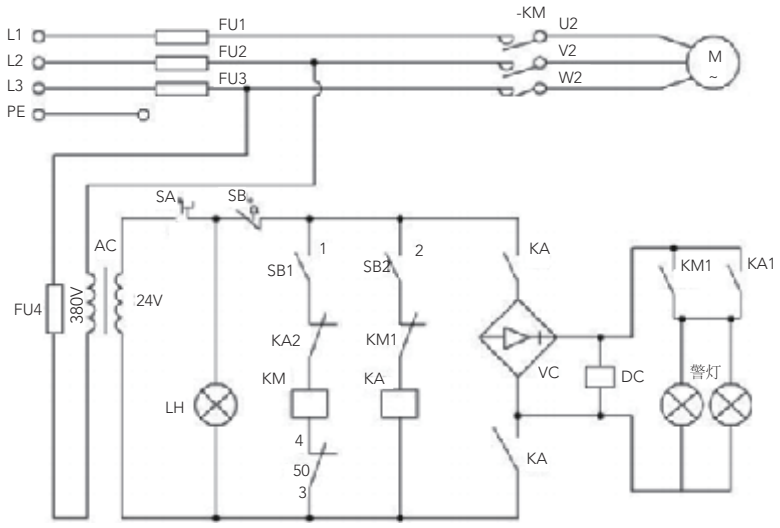

Code	Model	Name	Specifications	Quantity
KM	CTX2-1201	AC Contactor	24V	1
KA	JZ7-44	Intermediate Relay	24V	1
AC	BK50	Transformer	50VA 380V-24V	1
FU	RT18-32X	Fuse	FU1,FU2,FU3/20A FU4/10A	4
SAO	11Y/Z	Electrical Look		1
SBO	11Y/Z	Emergency Stop Button		1
SB	LA-19	Button		2
LH	HL2AD11-24V	Indicator Light		1
	JTE-1081J	Alarm Lamp		2
SQ	YBLX-K111	Limit switch		1
M	Y112M-4	Motor		1
OC		Solenoid valve	24V	1

Hydraulic System

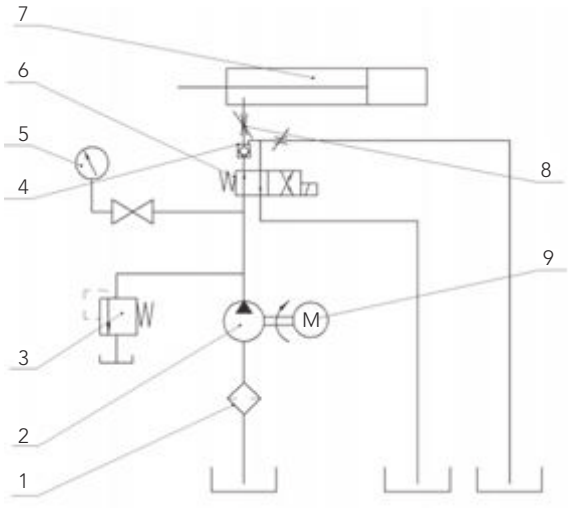

Number	Modol	Name	Quantity	Remark
1	WU63×100	Filter	1	
2	CBW310	Oil pump	1	Pressure 21MPa
3	YF-L10H4	Preasure relief valve	1	31.5MPa
4	DFY-L10H2	One -way valve	1	
5		Pressure mater	1	
6	DSG-03-2B2 -D24-DL	Electromagnatic directional valve	1	24AC
7		Hydraulic cylinder	1	
8	KC-03	Flow control valve	1	
9	Y112M-4	Motor	1	Power 4KW

Mechanical System

Chains diagram

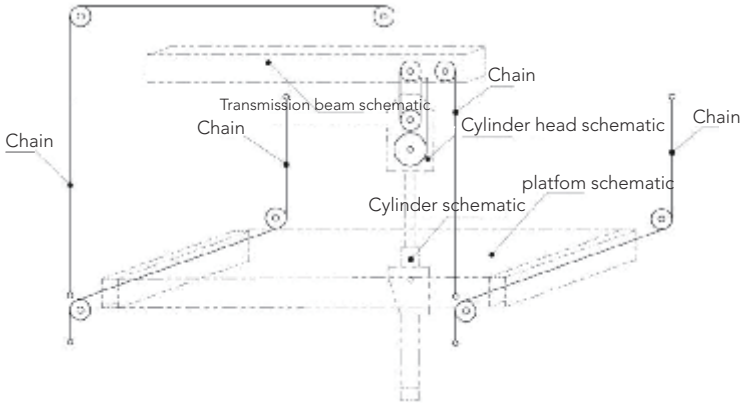

Lock diagram

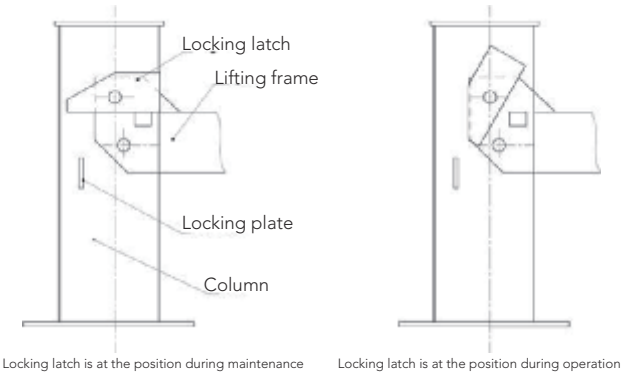

Locking latch position diagram

Installation & Maintenance Plan

Installation

(1) Install the automobile lift on a hard concrete foundation which could not vibrate during work.
(2) Install the column bolts in the chassis, and fix the chassis to the ground vertically after installation.
(3) Bolt the transmission beam to the vertical column.
(4) Connect the tray to the lifting beam.
(5) Connect the chains.
(6) Fix the hydraulic station to the back of a vertical column, connect an oil tube, and fill 30# hydraulic oil to the oil tank of the pump station.
(7) Apply grease to chains and idler pulleys.

Maintenance and Service

(1) Keep clean
Keep this automobile lift clean. Before cleaning, turn power off to assure safety.
(2) Keep the workplace clean. Too much dust will wear the parts and shorten their service life.
(3) Check the chains
Check the chains are in good conditions. In case of chain failure, repair it immediately to prevent an accident.
(4) Maintenance of the hydraulic system
i. Cleaning and oil replacement
After three months' use of this automobile lift, clean the hydraulic system and replace 30# hydraulic oil. After that, clean the hydraulic system and replace 30# hydraulic oil once every six months.

Packaging

Standard packaging:

we offer professional steel frame packaging for easy and stable container load. There are 2 types of different packaging:

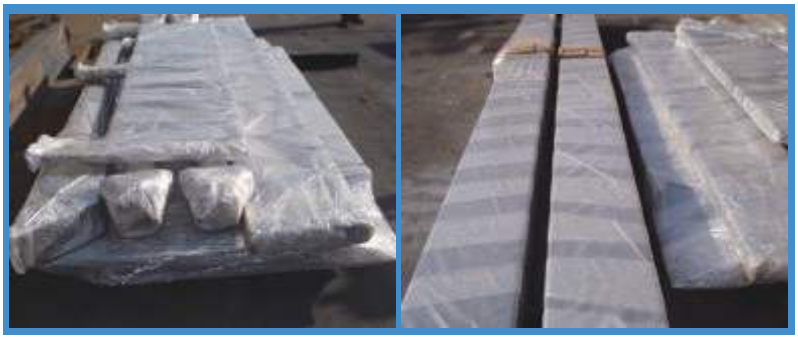

1.Packing by single unit(good for retails, all the parts and structures packaging separately)



2. Packing by two or more units (good for big projects, similar parts are packed together, e.g. all platform parts in 1 package, posts in other packages). It takes less container space and saves delivery cost.

Q & A

1. Is this product can be used indoor or outdoor?
   FP-VRC can be installed both indoor and outdoor as long as the site dimensions are enough.
2. What is the surface finishing for this product?
   It's paint spray as standard treatment, and optional aluminum steel sheet can be covered above for better water-proof and looking.
3. What is the power requirements? Is single phase acceptable?
   Generally speaking, a 3-phase power supply is a must for our 4Kw motor. If the usage frequency is low (less than one movement per hour), a single phase power supply can be used, otherwise it may lead to motor burnt out.
4. Can this product still operate if electricity failure happens?
   Without electricity the FP-VRC cannot work, so a back-up generator may be needed if electricity failure happens often in your city.
5. What is the warranty?
   It's five years for main structure and one year for moving parts.
6. What is the production time?
   It's 30 days after prepayment and final drawing confirmed.
7. What is the shipping size? Is LCL acceptable, or it must be FCL?
   As FP-VRC is a fully customized product, the shipping size depends on the specifications you need.
   As there are some electrical parts and hydraulic parts, and the packages for components are in different shapes, LCL cannot be used. 20 feet or 40 feet container is necessary as per the lifting height.

Reference Pictures





