TEXAS EQUIPMENT

2-Post Asymmetric Lift

OPERATOR'S MANUAL

United States

3301 W MacArthur Blvd
Santa Ana, CA 92704 USA
Tel: +1 (949) 333-3800
Fax: +1 (949) 333-3804

United Arab Emirates

Saif Zone T5-008
Sharjah, UAE
Tel: +971 (06) 552 98 60
Fax: +971 (06) 552 98 61

Egypt

AutoMechanica
15th of May Street
Shoubra Al-Khaimah 13793
Tel: +20 115 808 5046



Model
27010L

Contents

1. Introduction

Welcome
How To Use This Guide
How To Receive Additional Help

2. Safety Information

Notation
Important Information
Safety Instructions
Disclaimer

2. Technical Information

Description
Technical Specifications
Hydraulic System Information
Electrical System Diagram
Connection Diagram for Peripheral Electronics

3. Operating Instructions

Caution & Warning Labels
Operating Procedures
Emergency Lowering Procedures
Maintenance Procedures
Pressure Gauge

1. Introduction

1.1 Welcome

Congratulations on purchasing the 27010L 2-Post Hydraulic Lift. In the pages that follow you will find information on how to safely operate the 27010L.

1.2 How To Use This Guide

This Operator's Manual provides detailed instructions for properly operating the 27010L lift. Please read through the entire guide prior to using the lift to ensure safe and reliable operation.

1.3 How To Receive Additional Help

This guide is designed to provide complete, detailed instructions and information to assist in safe and smooth operation. If you require supplemental information or instructions, or encounter any other problems or issues, please contact Texas Equipment directly at +1 (949) 333-3800.

2. Safety Information

2.1 Notation



Indicates potential damage to equipment, accessories, or the vehicle if procedures are not followed precisely. Be sure to read each step completely prior to performing the necessary tasks.



Indicates potential property damage, personal injury or death due to hazards associated with the equipment, vehicle, or surrounding environment. Be sure to read each step completely prior to performing the necessary tasks.

2.2 Important Information

- Read this entire manual thoroughly prior to operating or maintaining this lift.
- The 27010L 2-Post Hydraulic Lift is designed **FOR INDOOR USE ONLY**. and should not be installed in a depression or pit. Refer to the Installation Instructions for proper installation requirements and procedures.
- The 27010L 2-Post Hydraulic Lift should only be operated by authorized personnel who have been properly trained.

2.3 Safety Instructions

- **DO NOT** raise a vehicle on the lift prior to completing the installation instructions and reading through these operating instructions.
- Technicians should be trained to use and maintain the lift using the installation and operator's instructions. **The lift should never be operated by an untrained person.**
- Always ensure the arms and adapters are clear of the driving path of the vehicle. Failure to do so could cause damage to the lift and/or vehicle.
- **DO NOT** overload the lift. The capacity of this lift is 10,000 lbs (4,500 kg).
- Positioning the vehicle is very important. Only trained technicians should position the vehicle on the lift. **Never allow anyone to stand in the path of the vehicle as it is being positioned. Never raise vehicle with passengers inside.**
- Position the arms to the vehicle manufacturer's recommended lifting points. Raise the lift until contact is made with the vehicle. Make sure that the arms have properly engaged the vehicle before raising the lift to a working height.

- Keep everyone clear of the lift while operating the lift.
- Unauthorized personnel should never be in the shop area while the lift is in use.
- Inspect the lift daily. **The lift should never be operated if it has damaged components, or is malfunctioning.** Only qualified technicians should service the lift. Replace damaged components with manufacturer's parts.
- Keep the area around the lift clear of obstacles.
- **Never override the self-returning lift controls.**
- Use safety stands when removing or installing heavy vehicle components.
- Avoid excessive rocking of the vehicle when it is on the lift.
- To reduce the risk of personal injury, keep hair, loose clothing, fingers, and all body parts away from moving parts.
- To reduce the risk of electric shock, **DO NOT** use the lift when wet. **DO NOT** expose the lift to rain.
- To reduce the risk of fire, **DO NOT** operate equipment in the vicinity of open containers of flammable liquids.
- Use the lift only as described in this manual. Use only manufacturer's recommended attachments.
- Unusual vehicles, such as limousines, RV's, and long wheelbase vehicles, may not be suitable for lifting on this equipment. If unsure about the application, contact Texas Equipment directly.
- The troubleshooting and maintenance procedures described in this manual can be done by personnel who have been familiarized with this manual. Any other procedures should only be performed by a trained lift service personnel. These restricted procedures include, but are not limited to, the following: cylinder replacement; carriage and safety latch replacement; leg replacement; and overhead structure replacement.
- Anyone who will be in the vicinity of the lift while it is in use should familiarize themselves with the Caution, Warning, and Safety related decals supplied with this lift. Replace them if the are illegible or missing.

2.4 Disclaimer

Texas Equipment reserves the right to change the specification or function of any product without prior notice. The information contained in this manual was considered accurate at the time of printing and is subject to change without notification. Any comments or concerns regarding this document should be directed to Texas Equipment.

3. Technical Information

3.1 Description

The 27010L 2-Post Hydraulic Lift is a surface mounted, frame contact lift which incorporates the latest safety technologies. Designed and manufactured for a 10,000 lbs (4,500 kg) lifting capacity, the 27010L can accommodate a wide range of vehicles.

3.2 Technical Specifications

Lifting Capacity	10,000 lbs (4,500 kg)
Lifting Height	3½ - 70” (90 - 1775 mm)
Front Arm Length	23½ - 47½” (590 - 1208 mm)
Rear Arm Length	33½ - 72½” (850 - 1840)
Power Unit	400V 50Hz
Overall Dimensions	132⅝ (L) x 137⅛ (W) x 142½” (H) 3369 x 3484 x 3621 mm

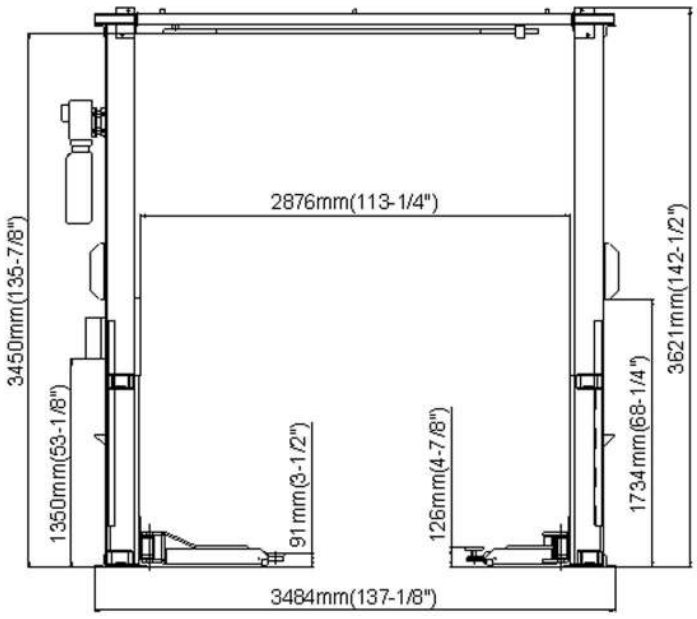

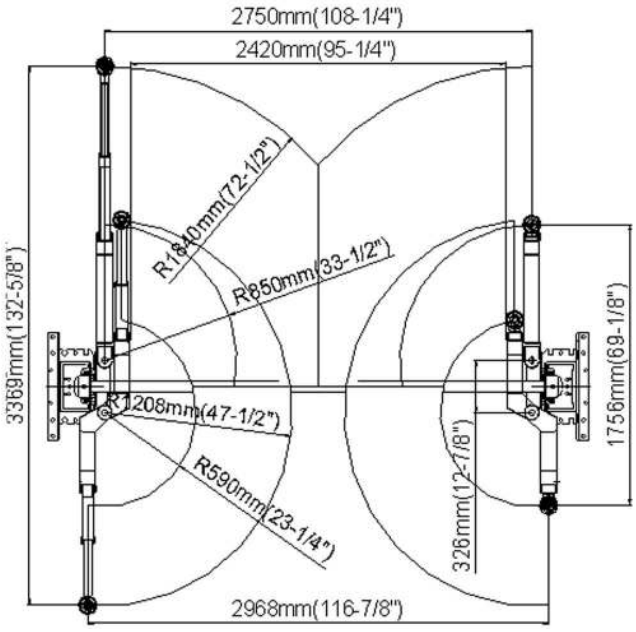

3.3 Hydraulic System Information

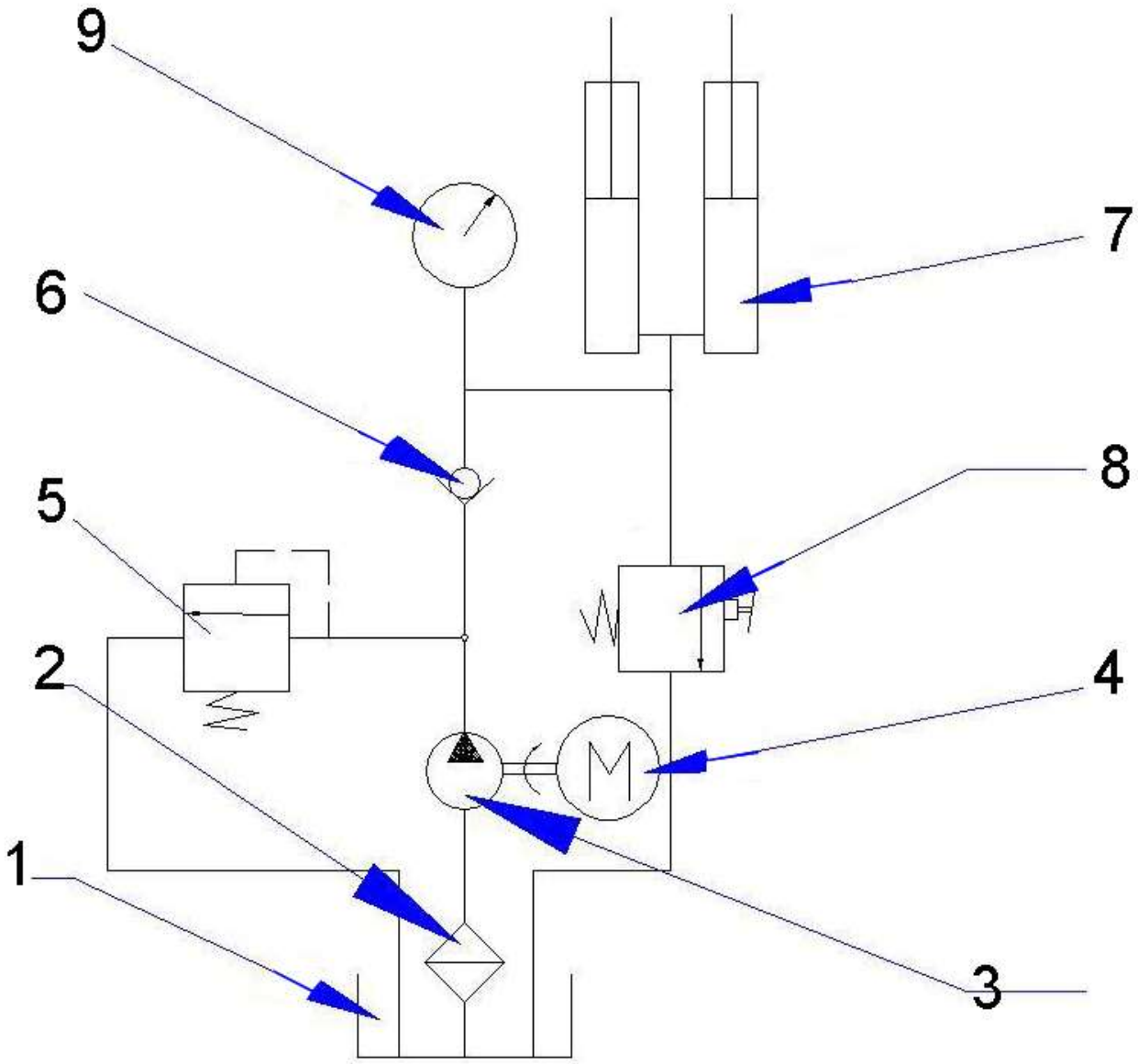

1. Oil Tank	2. Mesh	3. Gear Pump
4. Power Unit	5. Overflow Valve	6. One-way Valve
7. Cylinder	8. Hand Release Valve	9. Pressure Gauge
Hydraulic Pump	2.2 KW 2850 RPM	
Setting Pressure	20 Mpa	
Pump Flow Rate	2.1 ml/round	

3.4 Electrical System Diagram

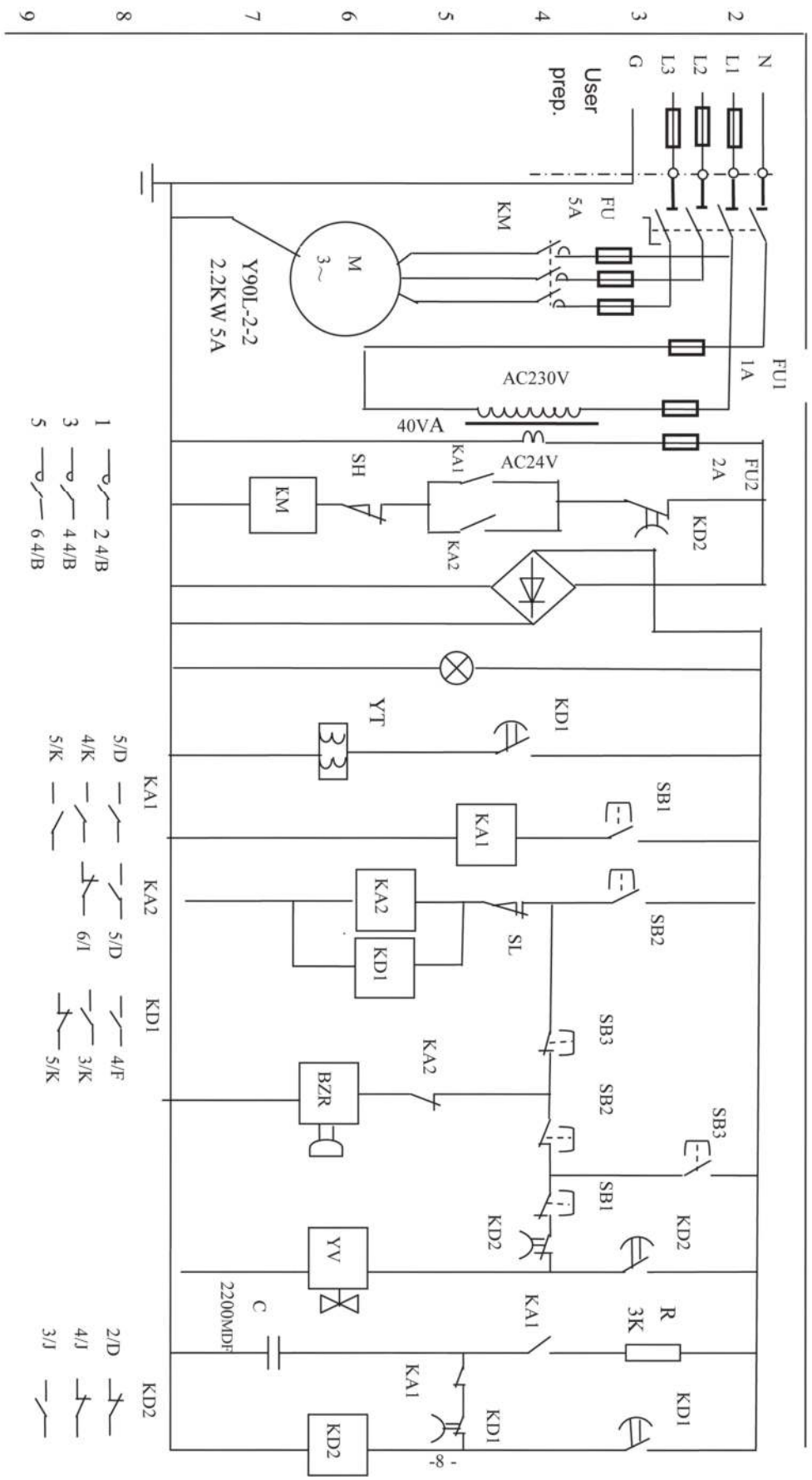

SB1: Raising SB2: Unlocking/Lower; SB3: Locking/landing; YT: Electromagnetic for unlocking; YV: Solenoid Valve

3.5 Connection Diagram for Peripheral Electronics

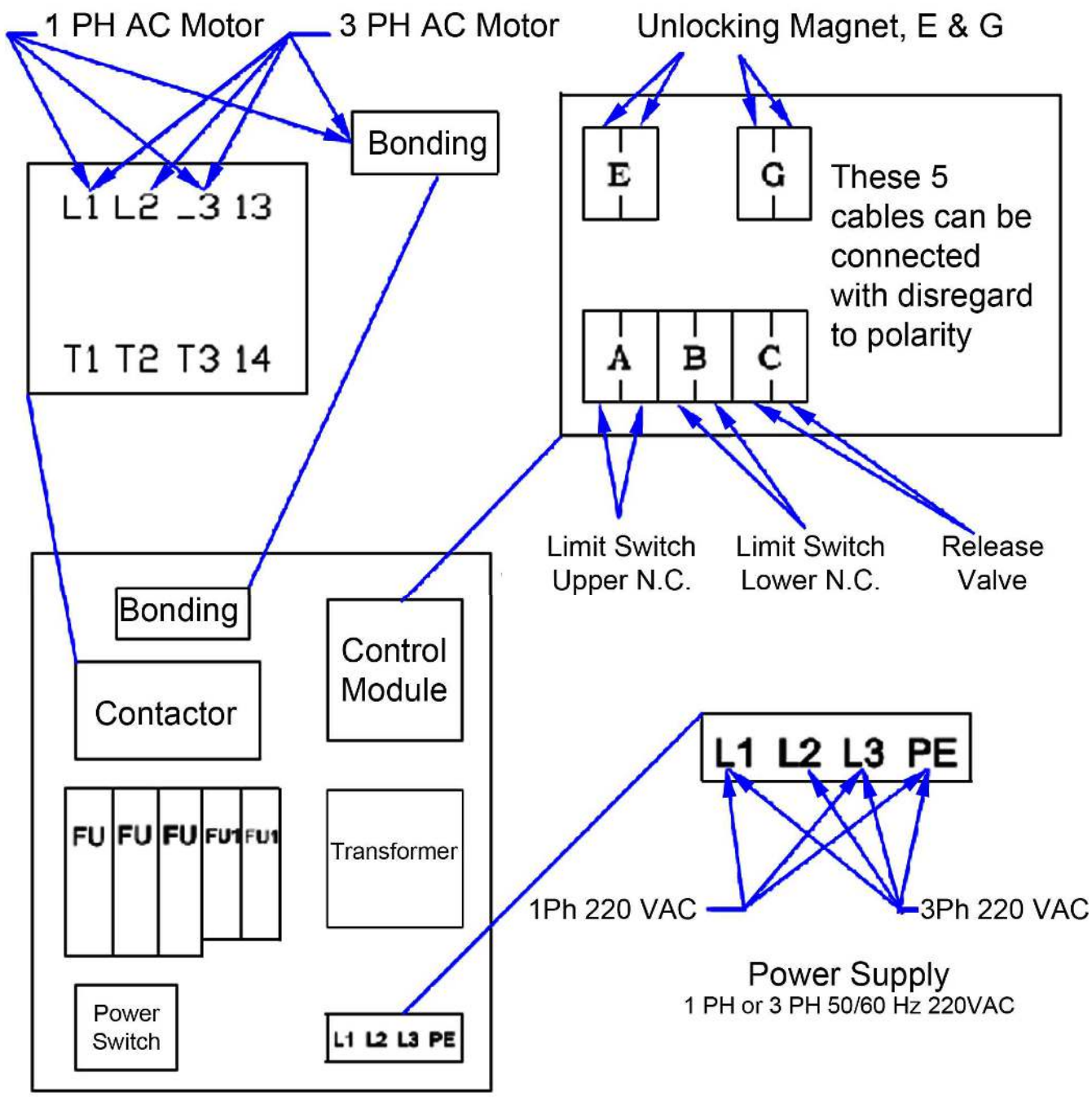

Internal Wiring is not depicted in this diagram.

4. Operating Instructions

4.1 Caution & Warning Labels

Be sure to familiarize yourself with the Safety Information contained in **Section 2** of this document. **FAILURE TO ADHERE TO THE SAFETY INFORMATION MAY RESULT IN PROPERTY DAMAGE, EQUIPMENT FAILURE, SERIOUS INJURY OR DEATH**.

























4.2 Operating Procedures



Be sure to familiarize yourself with the Safety Information contained in **Section 2** of this document. **FAILURE TO ADHERE TO THE SAFETY INFORMATION MAY RESULT IN PROPERTY DAMAGE, EQUIPMENT FAILURE, SERIOUS INJURY OR DEATH**.



To reduce the risks of personal injury and property damage, only trained personnel should operate the lift. After familiarizing yourself with the following procedures, practice using the lift for a few cycles without any load.



Always lift the vehicle using all four lifting points. **NEVER LIFT SPECIFIC PARTS OF THE VEHICLE INDEPENDENTLY FROM THE REST**. **THE ENTIRE VEHICLE MUST BE RAISED EVENLY**.



Be sure to position the heavy end of the vehicle over the shorter arms of the lift. This will ensure the vehicle will balance properly and reduce the risks of damage or injury.

A. The lift must be fully lowered, clear from personnel or clutter, and the swing arms must be in the full drive-through position prior to bring a vehicle onto the lift.

B. Position the swing arms such that the adapters align with the manufacture's recommended lifting points. Be sure to use the proper vehicle adapters to ensure safe operation.

NOTE: *Proper lifting points vary from vehicle to vehicle. It is crucial that you verify the proper lifting points to prevent serious damage to the vehicle. Manufacturers often designate the proper lifting points using a triangle symbol or a label located on the front door. If unable to identify the proper lifting points contact the vehicle's manufacturer to obtain this information prior to lifting the vehicle.*

C. Raising the lift:

- Press the **UP** button on the control panel. Stop before the adapters make contact with the vehicle's lifting points.
- Verify the arm restraint pins are engaged. If necessary, move the arms slightly to allow the restraint gear and pawl to mesh. **DO NOT** forcefully engage the pin. This will damage the gear's teeth.
- Press the **UP** button on the control panel until the vehicle lifts off of the ground. Stop once the tires are no longer touching the ground.
- Check the support adapters for secure contact with the recommended lifting points. If the adapters have shifted, lower the vehicle and reposition the adapters correctly.
- After ensuring that all the adapters are securely contacting the lifting points, raise the vehicle to the desired working height. **DO NOT** step under the vehicle without ensuring that all four adapters are securely contacting the lifting points.
- Press the **GROUND** button to ensure that the vehicle is resting on the safety locks. **DO NOT** step under the vehicle without verifying the safety locks are engaged.



When lifting trucks or vehicles with truck frames, be sure that: the vehicle's frame is strong enough to support the weight of the vehicle; the individual axle weight does not exceed 5,000 lbs (2,250 kg); adapters are securely contacting the recommended lifting points; the vehicle is stable on the lift; and that the overhead beam will not contact the vehicle. **FAILURE TO MEET ALL OF THESE REQUIREMENTS MAY RESULT IN PROPERTY DAMAGE,SERIOUS INJURY, OR DEATH**.

D. While the vehicle is raised:

- Avoid excessive rocking or shifting while the vehicle is raised. This can cause instability and may result in injury.
- Use the proper equipment and tools (including safety equipment) when working on a raised vehicle.
- Ensure the vehicle is stable and secure prior to working underneath.

E. Lowering the lift:

- Clear the area of any tools or equipment. Ensure that there is nothing underneath the vehicle.
- Press the **DOWN** button on the control panel. **DO NOT** allow anyone to pass under the vehicle while it is in motion. Be aware of the pinch points on the lift. Keep away from these areas while the lift is in motion.
- Press the GROUND button once the lift has reached its lowest point. A beep will confirm when the lift carriages have been lowered to the ground.
- Remove the adapters from underneath the vehicle and return the swing arms to their drive-through position.

4.3 Emergency Lowering Procedures

Follow these procedures to lower the lift during a power failure:

Switch the power to the **OFF** position.	
Remove the cover.	

Connect a pump to the adapter on the power unit.	
Raise the lift using the hand pump until the latch is disengaged. Have a person on each column disengage the latch and ensure it remains in the disengaged position.	
Loosen the bolt.	
Remove the bolt and the solenoid valve.	 

Place the magnet (JK01-70000) as shown to lower the lift to the ground.	
Remove the magnet and remount the solenoid valve and cover.	

4.4 Maintenance Procedures

NOTE: *Contact Texas Equipment directly for any clarification regarding the maintenance procedures. Only qualified trained personnel should perform maintenance on this equipment. Failure to complete the steps correctly can cause equipment failure which may result in personal injury or death.*

A. Regular Maintenance:

- Frequently check that all nuts and bolts are tight. Do not forget to check the anchor bolts.
- Keep the lift as clean as possible giving extra attention to electrical and hydraulic components.
- If coming across an oil leak, stop using the lift and contact Texas Equipment.
- Check cables and sheaves for wear regularly. Replace damaged or worn components with original equipment only.

B. Monthly Maintenance:

- Check equalizer cable tension.
- Lubricate the locking latch shafts. push the latch repeatedly to ensure that oil penetrates the joints.
- Lubricate the four inside corners of the columns with heavy-duty bearing grease.
- While the lift is lowered, check the hydraulic fluid level. Add fluid as necessary. Refer to the Installation Guide for proper fill procedures.
- Check the carriage latch syncing. Latches should engage simultaneously. Adjust the equalization cable as necessary to adjust the latches. Refer to the Installation Guide for proper adjustment procedures.

C. 3 Month Maintenance:

- Check the oil filter. If possible, clean and reuse. Otherwise, replace the oil filter.
- Check all safety decals on the lift. Replace any decals which are illegible.

4.5 Pressure Gauge

A pressure gauge can be connected to the hydraulic system to help diagnose problems.



