TEXAS EQUIPMENT

2-Post Asymmetric Lift

INSTALLATION GUIDE

United States

3301 W MacArthur Blvd
Santa Ana, CA 92704 USA
Tel: +1 (949) 333-3800
Fax: +1 (949) 333-3804

United Arab Emirates

Saif Zone T5-008
Sharjah, UAE
Tel: +971 (06) 552 98 60
Fax: +971 (06) 552 98 61

Egypt

AutoMechanica
15th of May Street
Shoubra Al-Khaimah 13793
Tel: +20 115 808 5046

Model
27010L



Contents

1. Introduction

- Welcome
- How To Use This Guide
- How To Receive Additional Help
- Safety

2. Unloading & Unpacking

- Precautions
- Unloading Procedure
- Unpacking Procedure
- Packing List

3. Installation & Setup

- Site Selection
- Foundation Requirements
- Required Tools
- Installation Procedures

4. Startup & Testing

- Load Tests
- Pre-startup Checklist

1. Introduction

1.1 Welcome

Congratulations on purchasing the 27010L 2-Post Hydraulic Lift. In the pages that follow you will find information on how to unload, unpack, assemble, and test your new lift. Please take the necessary time to thoroughly read this manual to ensure that you know what is required for a safe and smooth installation.

1.2 How To Use This Guide

This Installation Guide provides detailed, step-by-step instructions to direct you through the entire installation process. Please read through the entire guide prior to beginning installation to guarantee you have the necessary time and resources to complete the entire installation.

This guide features detailed illustrations and documentation to help assure proper installation. If unclear about any step, please verify with Texas Equipment prior to advancing to the next step.

This guide is arranged in the order which you should perform each task starting with unloading and unpacking. Make sure you complete each step before advancing to the next. It is vital that you do not skip steps in order to guarantee safety. Make sure to complete all required steps including the final test and checklist.

1.3 How To Receive Additional Help

This guide is designed to provide complete, detailed instructions and information to assist in a safe and smooth installation. If you require supplemental information or instructions, or encounter any problems or issues during the installation process, please contact Texas Equipment directly at +1 (949) 333-3800.

1.4 Safety

It is required that all persons involved with any part of the installation wear heavy-duty work gloves and reliable eye protection. Because of the bulky and heavy parts involved in the installation and the necessary tools and equipment, it is mandatory that all persons involved be in healthy condition and not be under the influence of any medications, alcohol, or any other intoxicants. Failure to adhere to these conditions could result in serious injury.

2. Unloading & Unpacking

2.1 Precautions

Unloading, unpacking, and installation procedures can be extremely dangerous if not performed with the utmost attention. Clear the entire area of any bystanders to avoid possible injury. Ensure a clean and clear work environment to further reduce the possibility of injury. Verify the integrity and reliability of all equipment used throughout the entire process to prevent equipment failure.

2.2 Unloading Procedure

For transportation, the two (2) main columns are bolted together along with a steel frame. The control unit is packaged in a box. These components should be unloaded from the truck using a forklift to prevent injury and ensure that the equipment does not get damaged. Unload the lift as close to the installation site as possible. It is recommended that you use scrap wood to support and/or balance the pieces as they are being unloaded and unpacked.

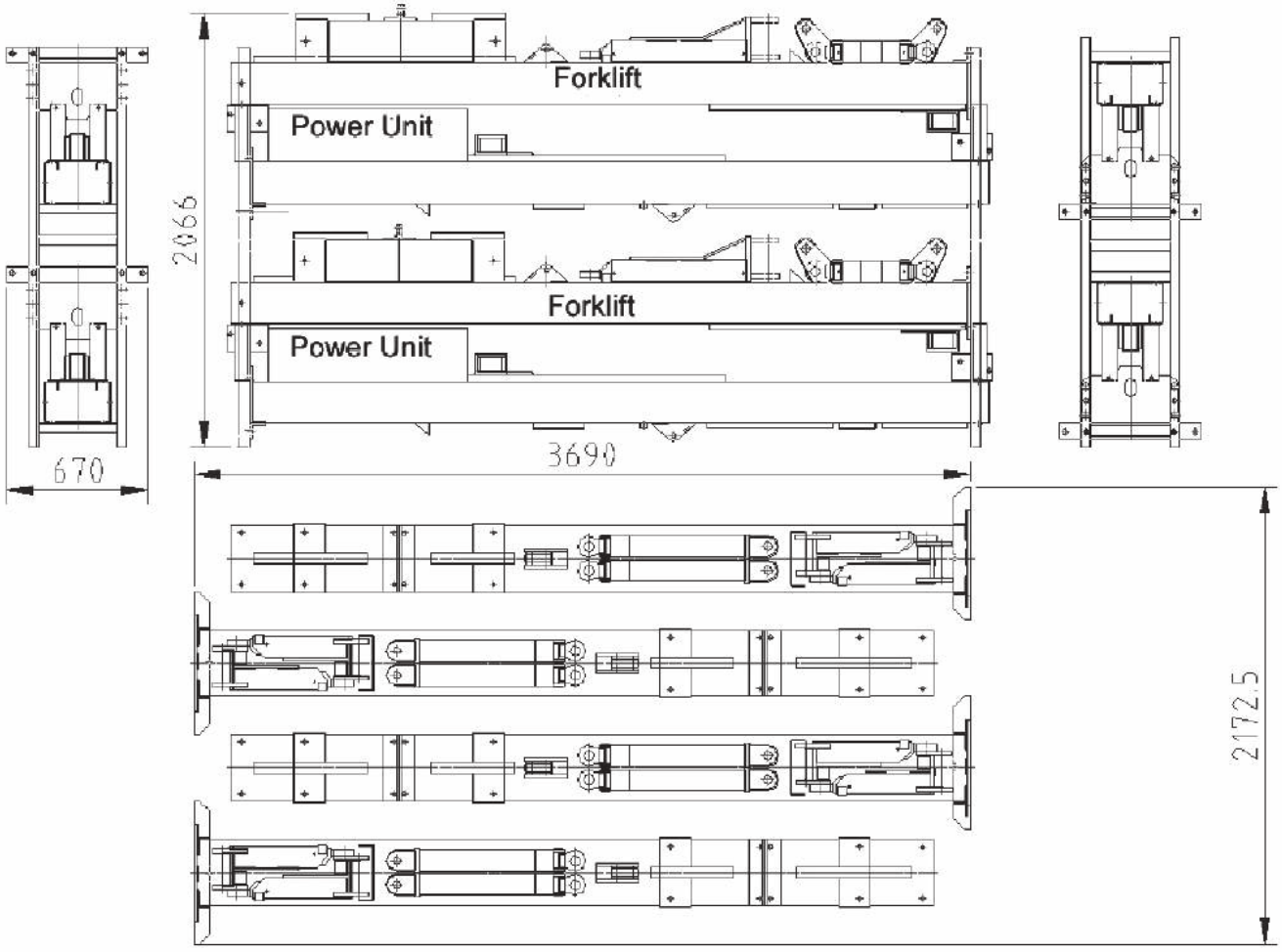

NOTE: *If there is no forklift available, the lift may be unpacked while still on the truck and each individual piece can be carried to the installation site. A minimum of 2 persons each capable of carrying at least 80 lb (35 kg) is required to unload the lift using this process. This method is not recommended due to a higher risk of injury and longer unloading and unpacking time.*

2.3 Unpacking Procedure

Unwrap each component and place them safely near the installation site. It is crucial that you do not overcrowd the area as this could delay the process and cause damage to sensitive components. It is recommended that you use scrap wood to support and/or balance the pieces as they are being unloaded and unpacked. **DO NOT** stand the columns vertically as this may result in severe damage or injury. **DO NOT** stack any heavy or sensitive components directly on-top one another as this could cause severe damage to the equipment. **DO NOT** discard any of the packaging hardware as they are necessary to complete installation.

2.4 Packing List

1. Vertical Column (2 pieces)
2. Hydraulic Cylinder (2 pieces)
3. Short Swing Arm (2 sets)
4. Long Swing Arm (2 sets)
5. Lifting Carriage (2 sets)
6. Overhead Beam (1 assembly)

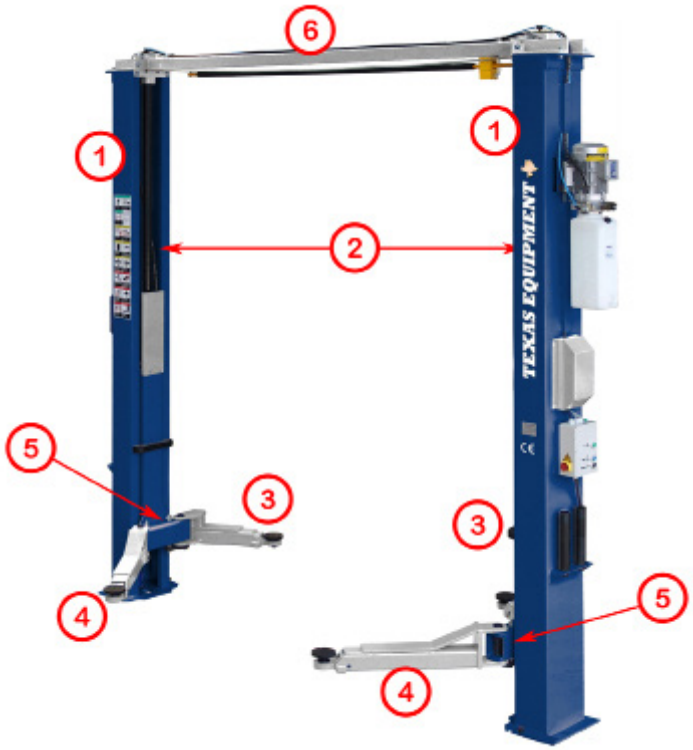

3. Installation & Setup

3.1 Site Selection

The 27010L 2-Post Hydraulic Lift is designed **FOR INDOOR USE ONLY**. It may not be installed in a room with explosion hazards. It is not designed for wet environments (such as a car wash). Failure to meet all of these condition could cause equipment failure and serious injury.

3.2 Foundation Requirements

The 27010L 2-Post Hydraulic Lift must be installed on level ground. The foundation must be reinforced concrete with a minimum thickness of 6” (150 mm), a compressive strength of at least 4000 psi (275 bar), and no less than a 60” (1500 mm) radius surrounding each column in every direction.

3.3 Required Tools

- Impact drill
- Drill bit - Carbide tip, 19 mm diameter
- Open ended wrench
- Torque wrench
- Ratchet & deep sockets
- Level (minimum 18” or 450 mm long)
- Vise grips
- Tape measure
- Funnel
- Hoist or forklift
- 13’ (4 m) Ladder (2)

3.4 Installation Procedures

NOTE: *Make sure you read through the entire installation procedure prior to beginning the process. The will ensure that you fully understand what will be required and will prevent delays during installation. Whenever possible, use the original blueprints for reference. Make sure you satisfy all of the requirements specified in 3.1 and 3.2 prior to beginning installation.*

1. **Reference Lines:**

   A. Snap chalk lines to identify the lift's center line.

   B. Snap another chalk line parallel to the center line. This line must be 230 mm away from the center line. The new line represents the rear edge of the columns' baseplates.

   C. Snap two chalk lines perpendicular to the center line. These lines should be 3500 mm apart and represent the outside width of the columns.

DO NOT use these chalk lines for lining up or positioning any of the parts or equipment. These lines are for **REFERENCE ONLY** and are approximations. Please follow the detailed instructions for positioning each piece.

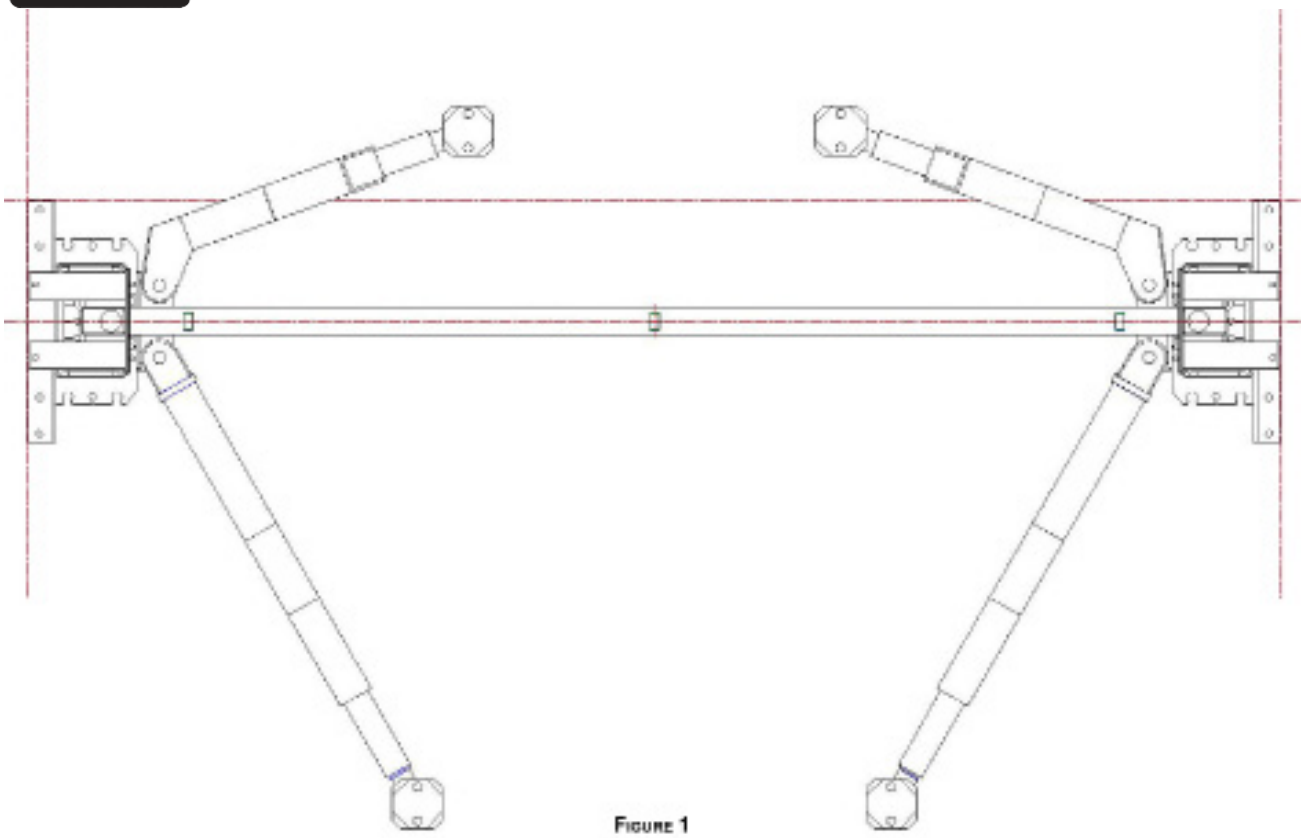

FIGURE 1

2. **Unpack the lift** as described in 2.3. Remove the bolts that hold the two vertical columns together. Remove the cross beam. **DO NOT** stand the columns vertically as this can severely damage them. **DO NOT** stack any heavy or sensitive components directly on-top one another as this could cause severe damage to the equipment. **DO NOT** discard any of the packaging hardware as they are necessary to complete installation.

3. **Attach the vertical columns to the overhead beam** using the provided hardware (Figure 2):

   - 8 x Bolts
   - 8 x Washers
   - 8 x Hexnuts

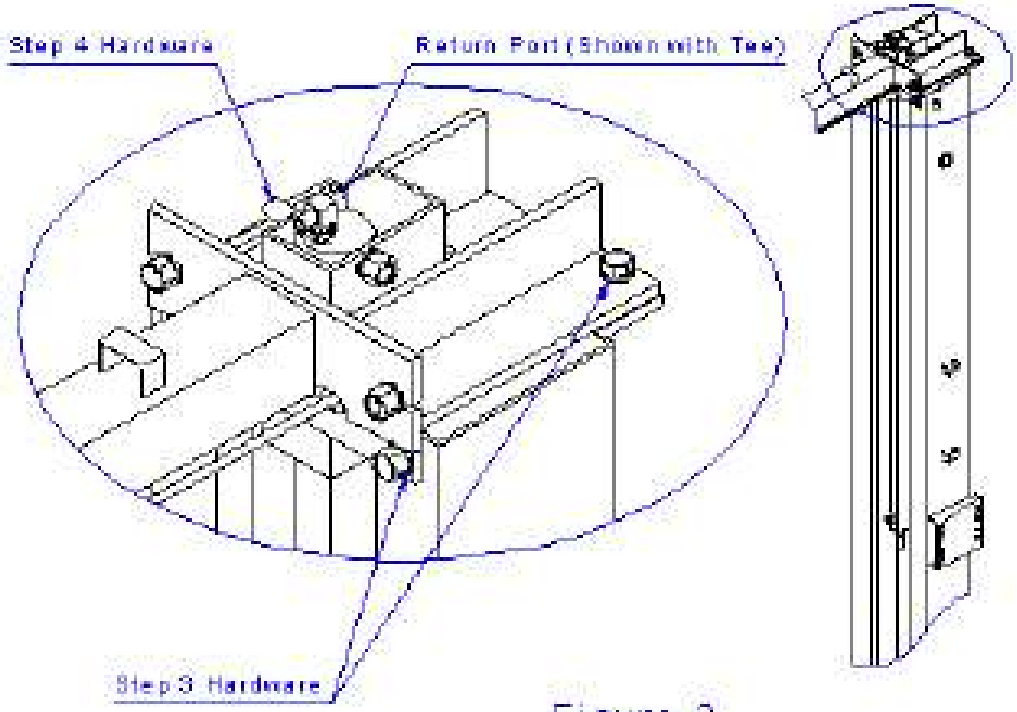

Figure 2

4. **Installing hydraulic cylinders, fittings, hoses, & cables:**

CAUTION: When connecting any hydraulic fitting to pipe threads, always use Teflon tape to ensure a tight seal. **DO NOT** start the Telfon tape within 3 mm of the end of the fitting. Failure to adhere to these instructions may result in hydraulic system failures and cause serious damage or injury.

NOTE: *Whenever connecting a flared (JIC) fitting, use the following tightening instructions. This will ensure a reliable seal without causing damage to the fittings.*

- Be sure to only turn the hex-nut side of the connection while tightening. **DO NOT** turn the flare seat.
- Hand-tighten the fittings together.
- Using a properly sized wrench, rotate the hexnut side of the connection until it reaches the end of the threading. **DO NOT** overtighten.
- Loosen the hex-nut by one full rotation.
- Retighten the hex-nut until it is sealed with the flare end. **DO NOT** overtighten.

A. Connect the hydraulic bushings and the push-in return line connectors to the main-side cylinder and the off-side elbow.

FOR EXTENDED HEIGHT MODELS ONLY (27010M / 27010H): *Cut a piece of return line tubing equal to the length of the upright column. Attach this piece of tubing to the main-side return port fitting.*

B. Install the cylinders into the cylinder mounts using Grade 8 bolts, cylinder bushings (spacers), washers, and nylon nuts (Figure 2). The port found on the rod end of the cylinder should be positioned facing towards the leg's open side.

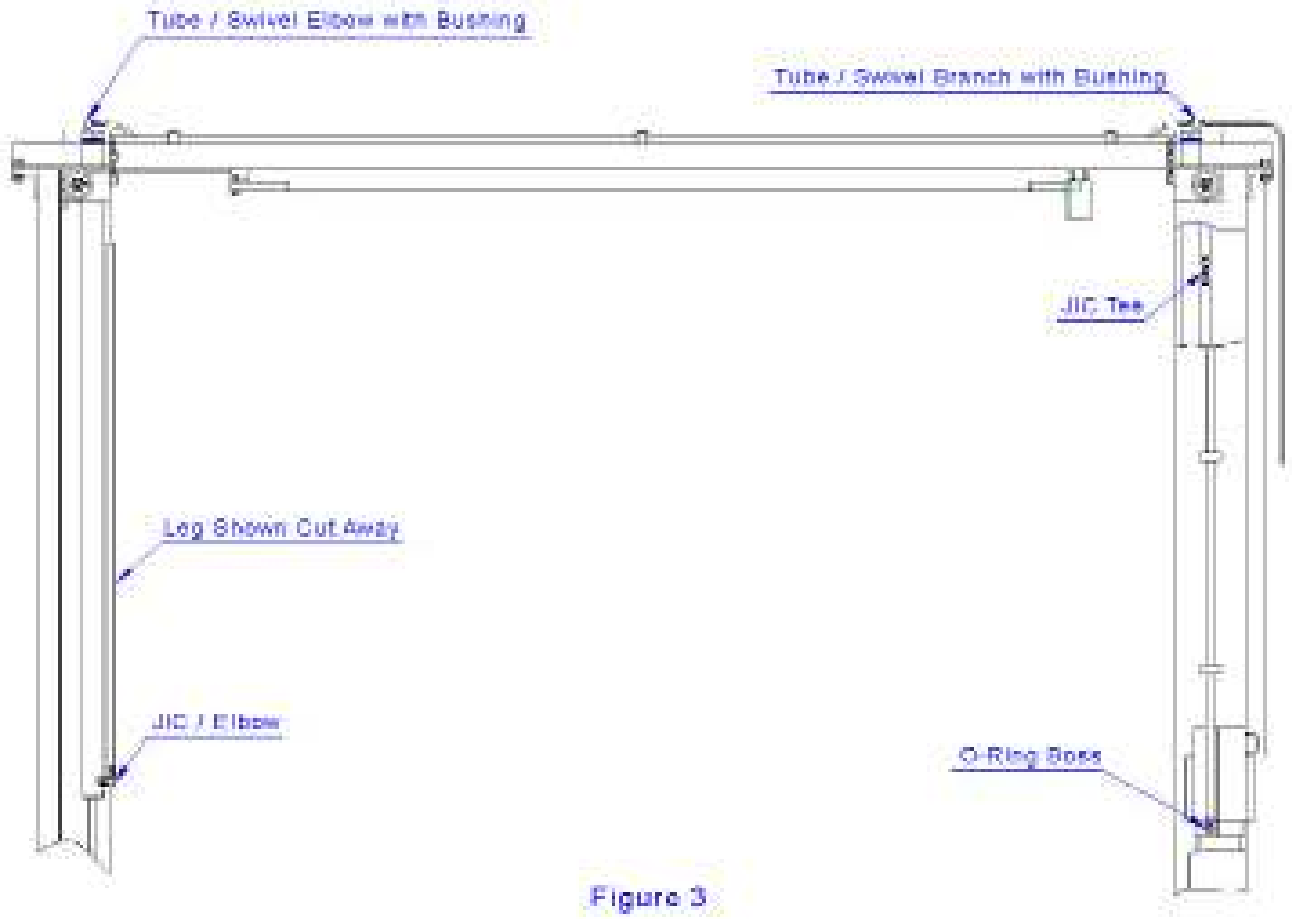

Figure 3

C. Connect the shortest hydraulic hose to one of the runs on the JIC tee fitting.

D. Connect the longest hydraulic hose to the other run on the JIC tee fitting.

E. Connect the remaining hydraulic hose to the branch on the JIC tee fitting.

F. Install the rubber grommet into the hole in the main-side leg.

G. Connect a male pipe thread to the male JIC elbow to the port near the rod end of each cylinder. **The fittings must face away from the leg's base-plate**.

H. Connect the free end of the shortest hydraulic hose to the elbow on the main-side's cylinder. **HAND TIGHTEN ONLY**.

I. Feed the shortest remaining hose through the rubber grommet from inside the leg towards the outside. Continue feeding the hose down through the hose guide on the outside of the leg.

J. Feed the long hose through the cylinder mount along the cylinder and out the end.

K. Feed one end of an equalization cable through the right hole on the top of the carriage (Figure 4). Continue feeding the cable until it extends out through the bottom of the carriage. Attach a nylon insert locknut and washer to the end of the cable. Make sure to leave 3.5 mm of cable extended past the nut. Pull from the opposite end of the cable until the washer makes contact with the top of the carriage. Repeat this step for the opposite cable and carriage.

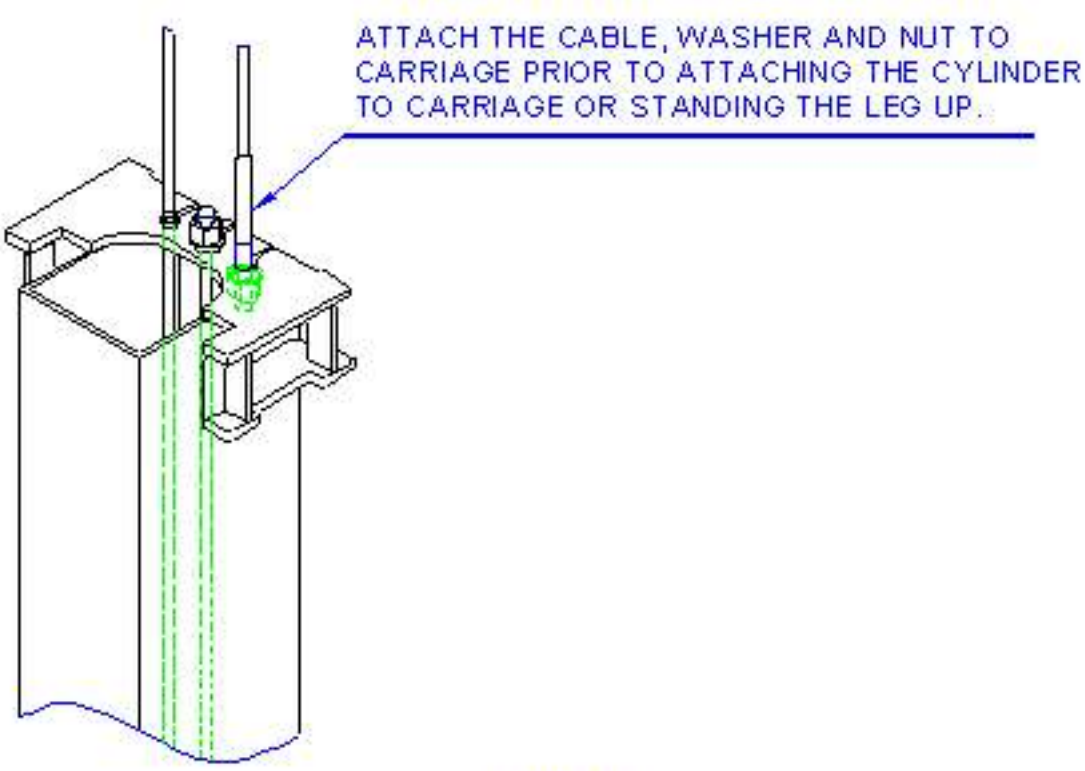

Figure 4

L. Attach the cylinders to the carriages. **Make sure the snap ring on the cylinder rod is properly aligned with the groove**. Pull the carriage up to the cylinder and feed the rod through the hole in the carriage plate until it makes contact with the snap ring. **Be cautious not to damage the cylinder threads during this process**. Attach the full nut to the rod and tighten until the cylinder rod starts turning. Using a wrench to hold the full nut, tighten a jam nut against the full nut. Repeat this step for the other cylinder.

DAMAGE OR LEAKS RESULTING FROM THE MISHANDLING OF THE CYLINDERS OR RODS IS NOT COVERED UNDER WARRANTY. PLEASE USE EXTREME CARE WHEN HANDLING ALL SENSITIVE COMPONENTS.

5. **Carriage placement:**

The safety lock is set in the **ENGAGED** position by default. Each column contains one locking device (Figure 5).

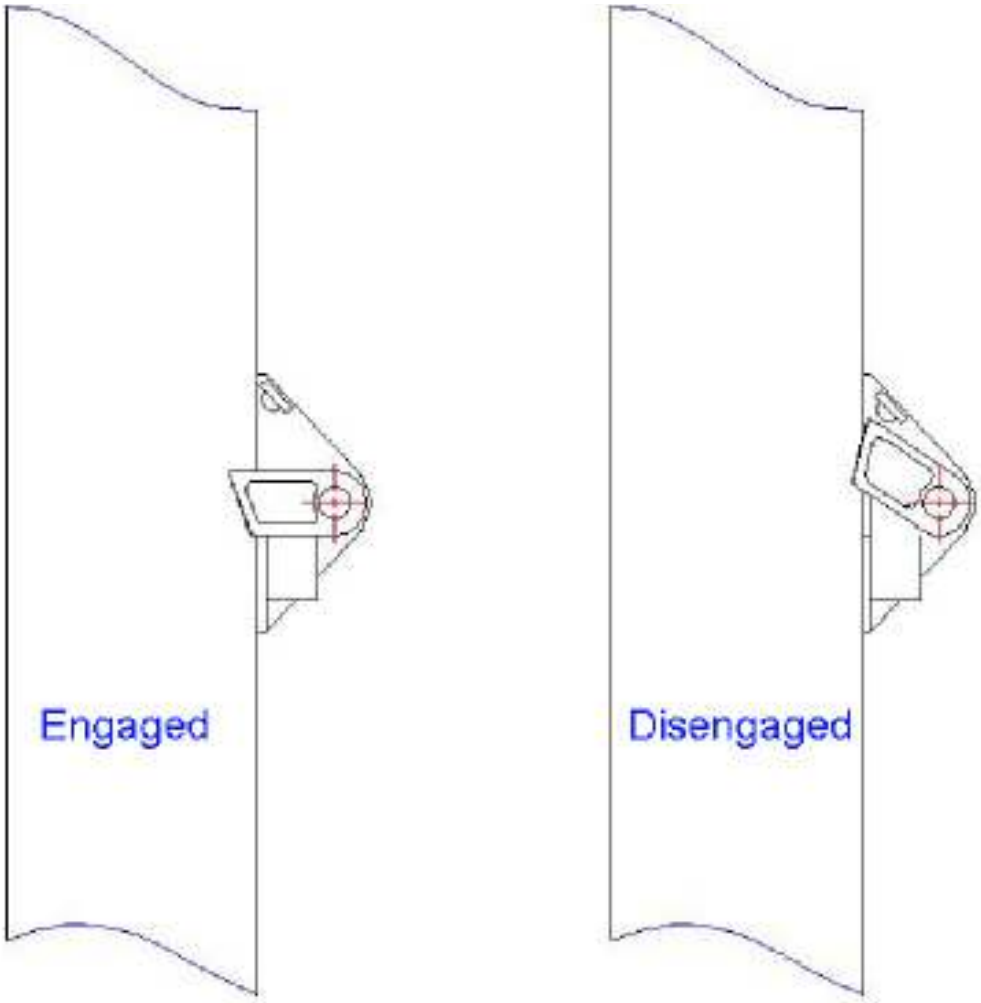

Figure 5

6. **Leg Positioning & Anchoring:**

A. Position the main-side leg where it will be secured (Figure 1).

B. The anchor bolts must be installed at least 6” (150 mm) from any edge or seam in the concrete. The concrete must have minimum thickness of 6” (150 mm) and a compressive strength of at least 4000 psi (275 bar).

C. Using the leg as a template, **drill holes for the anchor bolts for the main-side leg only**.

- Use an impact drill with a 19 mm Carbide tip, solid drill bit.
- Be sure to keep the drill perpendicular to the floor while drilling.
- **DO NOT** apply excessive pressure - let the drill do the work.
- Lift the drill up and down while drilling to prevent excessive dust build-up and binding.
- Drill the hole completely through the slab and clean the area of any dust and debris.

D. Assemble the washers and nuts onto the anchor bolts. Thread the nuts onto the anchor bolts such that the end of the bolts are partially exposed through the tops of the nuts (Figure 6). Using a hammer, carefully tap the anchor bolts into the concrete holes until the washers rest against the base plate. **DO NOT** use excessive force as this can damage the nuts and/or bolt threads.

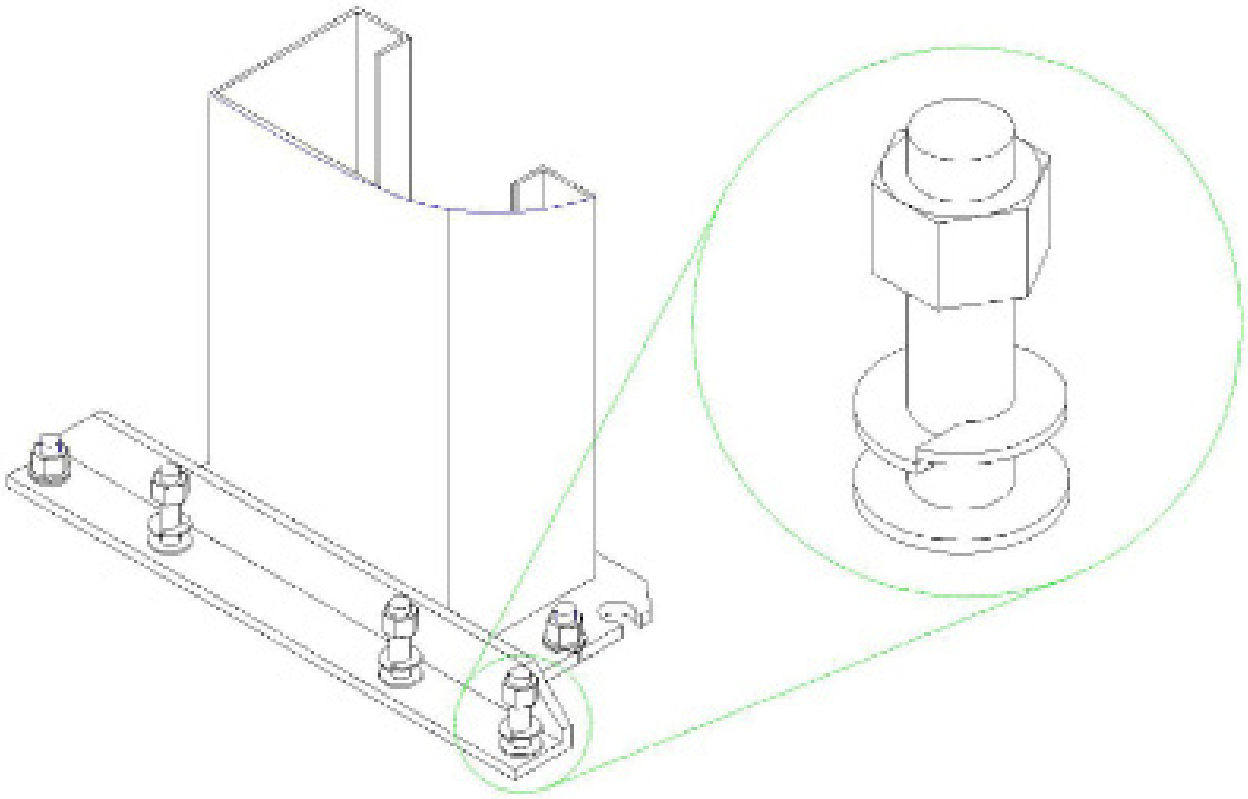

Figure 6

E. Using a level, shim the leg as necessary to make sure the main-side leg is completely vertical (Figure 7). Be sure to use the level on each side to ensure precision. If more than ½" (13 mm) of shimming is required **DO NOT** use the provided anchors and shims. Use longer anchors and larger shims. The new shims can be fabricated from ¼" (6.5 mm) or ½" (13 mm) steel. The minimum required width is 2" (50 mm) for the flat steel.

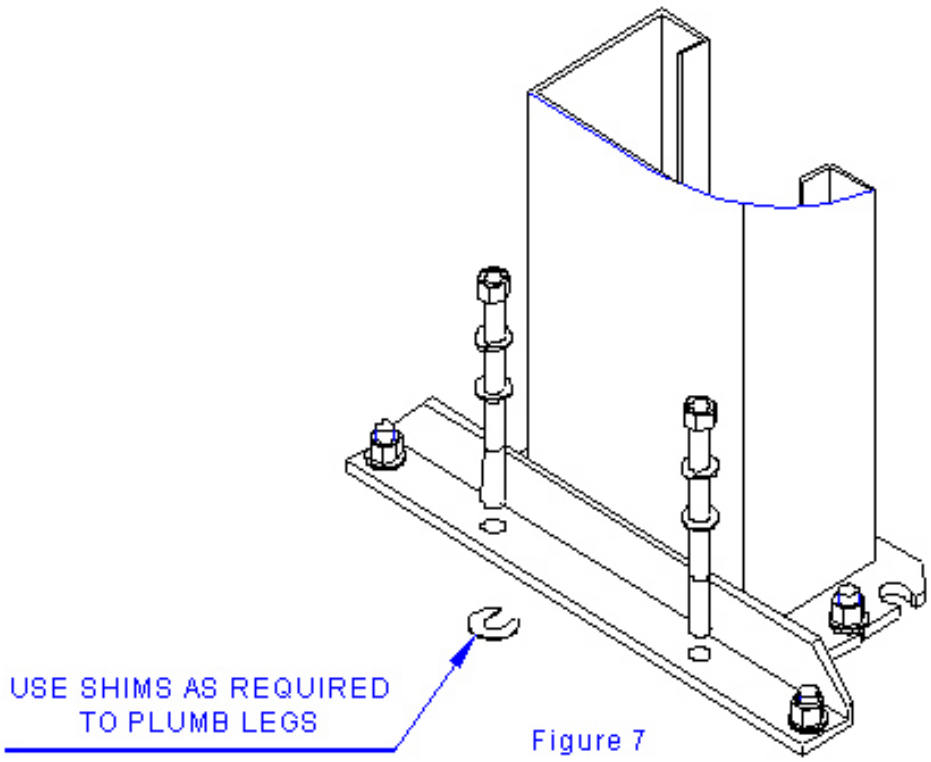

Figure 7

F. Once the leg is completely level, tighten the nuts on the anchor bolts to 150 ft·lb (203 Nm). **DO NOT** use an impact wrench. If the anchor extends more than 2¼" (57 mm) above the floor then the anchor has not been embedded deep enough.

NOTE: *If the anchor nuts will not reach 150* ft·lb *(203 Nm), the anchors cannot be adequately embedded , or the proper spacing cannot be achieved, replace the concrete underneath the leg with a 48 x 48 x 8" (1220 x 1220 x 200 mm) pad of 4000 psi (275 bar) concrete. This concrete pad must be keyed under the existing floor. Be sure to allow the concrete to fully cure prior to re-attempting installation.*

G. Recheck the leg's vertical alignment after tightening the anchor nuts. Re-shim to re-align if necessary.

H. Position the off-side leg where it will be secured (Figure 1). **DO NOT DRILL HOLES FOR THE ANCHORS**.

7. **Overhead assembly:**

A. Using 2 HHCS and 2 flange lock nuts, attach the overhead switch assembly to the overhead beam (Figure 8).

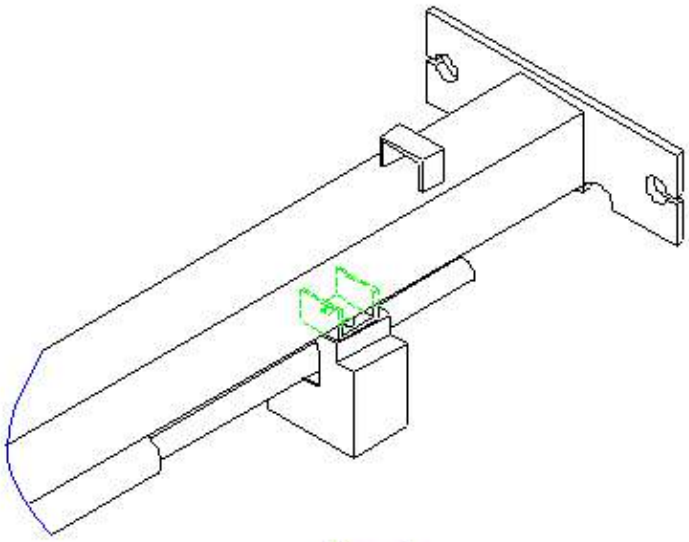

Figure 8

B. Slide the end of the padded switch bar without the mounting hole through the slot in the overhead assembly. Connect the padded switch bar to the inside hole of the overhead bear using a cylindrical spacer, HHCS, and flange nut (Figure 9).

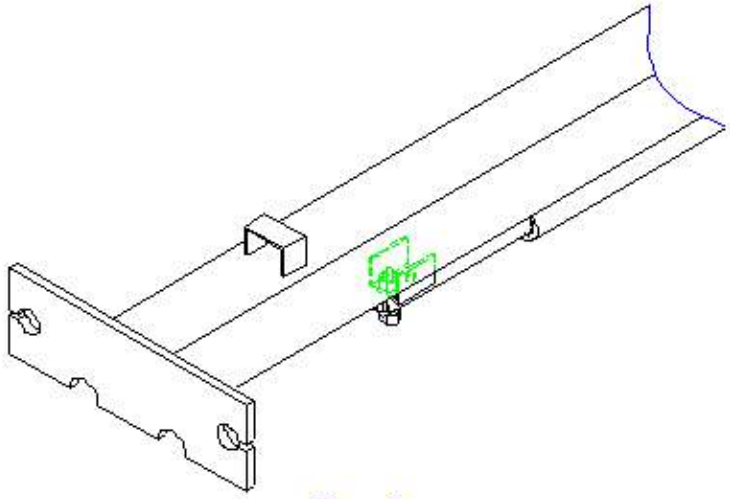

Figure 9

C. Attach the overhead beam to the uprights using 2 bolts, 2 washers, and 2 nuts on each side (Figure 10).

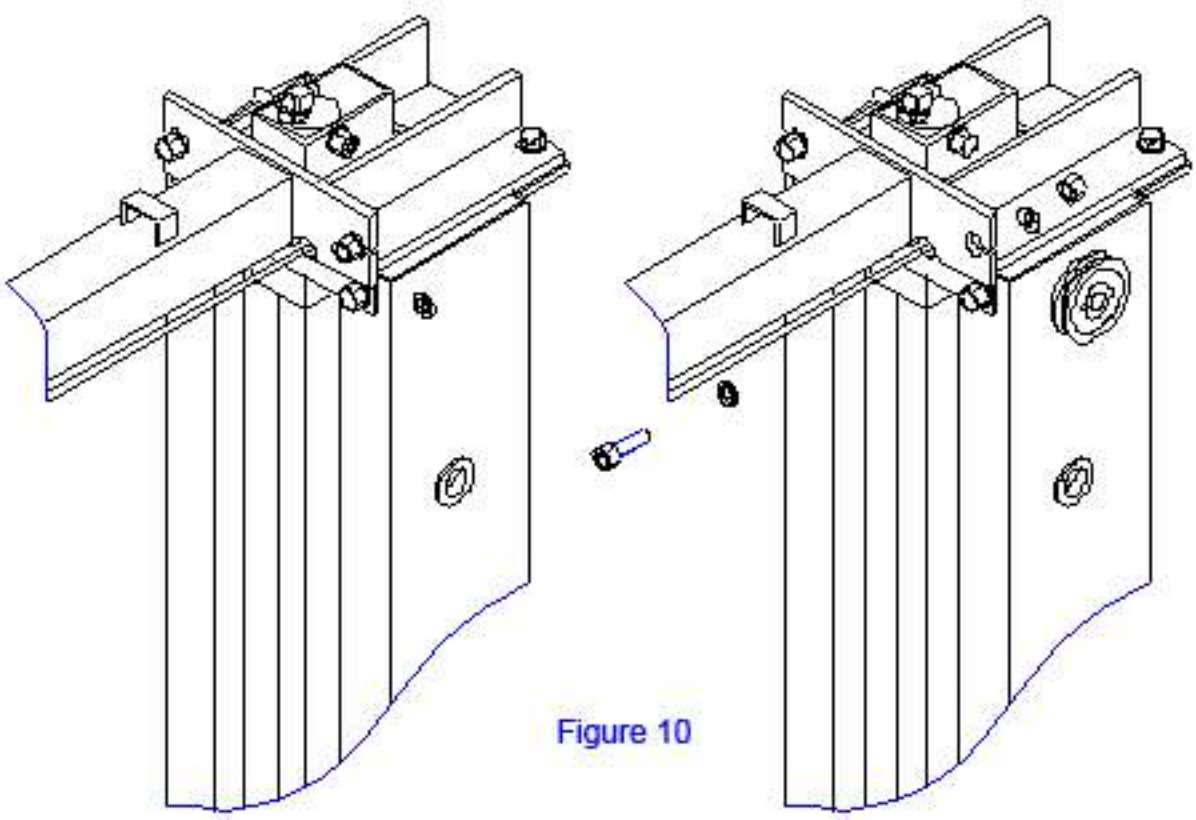

Figure 10

8. **Anchoring the off-side leg:**

A. Using a level, check the vertical alignment of the entire structure. Shim the leg as necessary to ensure that the leg is absolutely vertical. Be sure to check this from every side of the leg.

NOTE: *The final positioning of the legs may vary from the preliminary layout. This is acceptable. It is essential that the legs are parallel to each other and perfectly perpendicular to the floor.*

B. Install the anchor bolts for the off-side leg (refer to *Step 6: Leg Positioning & Anchoring* for proper anchoring procedures).

9. **Routing equalization cables & off-side hose:**

A. Verify that the carriages are resting at the same safety points by measuring the distance between each carriage and its respective base plate. The measurements should be within ⅜" (9.5 mm) of each other. Note both measurements to ensure that the carriages do not move while connecting cables and hoses.

B. One end of each cable should already be connected to each carriage. Feed the other end of the cable behind the main-side hose and through the top of the leg (Figure 11).

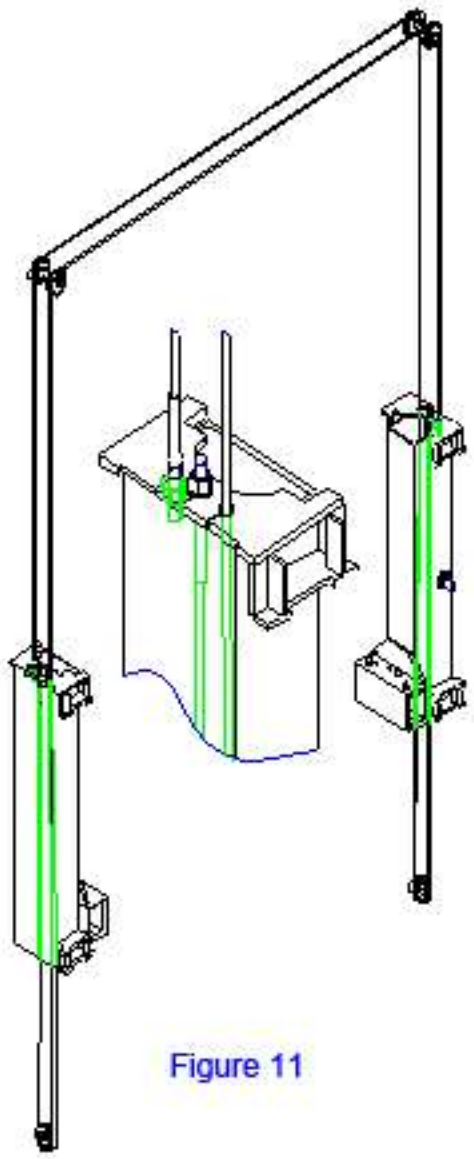

Figure 11

B. Feed the off-side hose through the hose guides on the top of the overhead and down through the off-side upright tube.

C. Feed the cable through the clearance hole in the left corner of the carriage top. Continue feeding the cable around the sheave at the bottom of the leg and through the hole in the center of the carriage top.

D. Secure the cable to the carriage top using a nylon insert nut and washer. **DO NOT TIGHTEN THE CABLE AT THIS TIME**.

E. Repeat these steps for the main-side cable. Be sure not to cross the cables.

NOTE: *It is crucial that the carriages remain resting at the same safety lock position. An uneven tightening of of the cables will cause the carriages to be out of sync. It is necessary to ensure that the carriages do not move during this entire process.*

F. Remove the slack from the cables by turning the nuts on the top of each carriage. **DO NOT TIGHTEN**. Use vise grips to hold the end of the cable. Be sure not to damage the threads.

G. Tighten to cable nuts on both carriages until the cables are tight. Correct tension on the cables is achieved when the cables can be pulled together using approximately 15 lbs (7 kg) of force.

H. Verify the carriages have not moved by measuring their positions again. Also check that the safety latch pull rod will not disengage. This will verify that neither carriage has been raised. **IF EITHER CARRIAGE HAS MOVED MORE THAN ⅛" (3.2 mm) YOU MUST LOOSEN BOTH CABLES AND REPEAT THESE PROCEDURES**. Failure to do this can result in equipment failure and serious injury.

I. If the cables have been installed and connected correctly, both carriages will raise in unison. If there is equipment available which can raise the carriages, lift one of the carriages enough to pull out the safety latch pull rods and lower both carriages to the ground. Although not necessary, this step will simply the cylinder bleeding procedures.

10. **Mounting the power unit:**

A. Insert 4 bolts to the 2 highest and 2 lowest holes in the mounting bracket. Fasten a plain nut to each bolt.

B. Attach the power unit. Secure it using nylon insert nuts.

11. **Hydraulic system:**

A. Install the plastic push-in plug into the small brass elbow on the power unit's tank.

B. There is an open port on the right side of the power unit. Attach the o-ring elbow to this port. Be sure the open end faces upward.

C. Attach the hose coming from the rubber grommet atop the leg to the installed elbow on the power unit.

D. Attach the hose coming from the off-side upright to the elbow at the bottom of the off-side cylinder. Hand tighten.

E. To prevent the carriages from coming in contact with the hoses, take out any slack by pulling the hoses upward. This will remove any slack between the cylinder fitting and the cylinder mount. Secure the hose to the main-side cylinder by fastening a wire-tie around the tee and cylinder. The tee should be positioned to aim directly out through the grommet (Figure 12). Secure the hose to the off-side cylinder at approximately the same height using another wire-tie.

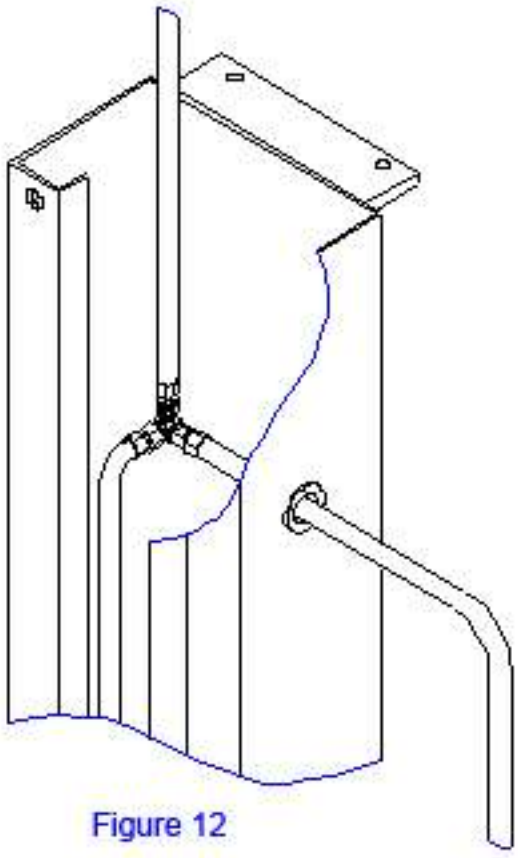

Figure 12

F. Any excess slack should be taken up inside the uprights or where the uprights meet the overhead beam.

G. Remove the fill level screw near the top of the power unit's tank. Remove the fill cap from the tank and fill with Dexron III ATF or hydraulic oil that meets ISO-22 standards. Fill until the fluid level reaches the bottom of the screw hole. Replace the fill screw and tank breather.

12. **Bleeding the hydraulic system:**

A. Loosen the connections between the hoses and fitting attached to the cylinders. **DO NOT LOOSEN THE CONNECTION BETWEEN THE FITTINGS FROM THE CYLINDERS**.

B. Run the power unit until fluid appears at the main-side cylinder. When there is no air reaching the cylinder, stop running the power unit and retighten the connection.

C. Repeat previous step for the off-side cylinder.

D. Raise the lift to disengage the safety latches. Lower the carriages to the ground and repeat the bleeding procedures (Steps 12A - 12C). *(If the carriages were lowered when beginning the bleeding process, disregard this step.)*

E. Add fluid to the power unit's tank as described in Step 11G.

13. **Assembling the arms & arm restraints:**

A. Position the gears against the bottom on the arms with "TOP" facing upward (Figure 13). Attach the gears to the arms using long HHCS. **DO NOT TIGHTEN**.

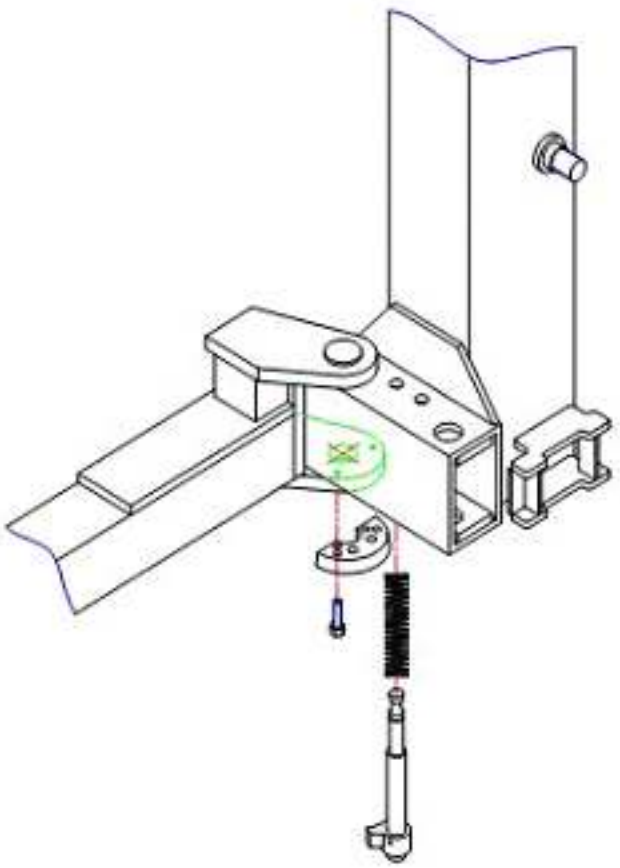

Figure 13

B. Position the restraint pawls on the carriage to mate with the gears on the arms.

C. Install the arms and arm pins. The long swing arms should be on the front side (drive-in side) of the lift.



CAUTION: DO NOT FORCE THE GEARS. IT MAY BE NECESSARY TO PULL UP ON THE RESTRAINT ACTUATOR PIN IN ORDER TO INSTALL THE SWING ARM PIN.

D. Tighten the gear bolts to 30 - 34 ft·lb (40 - 46 Nm).

14. **Lubricate the 4 inside corners of both legs** using heavy-duty bearing grease.

15. **Wire Connections:**

A. Hydraulic pump:

Mount the power unit.	
Feed the power line and the solenoid valve's wire through the opening	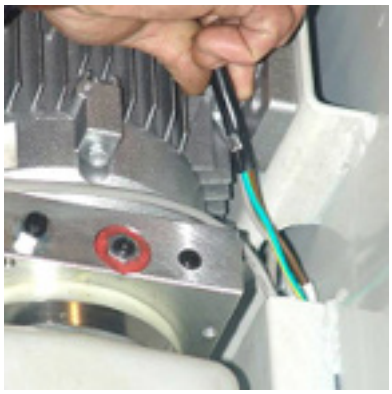

B. Control Box:

Open the control box enclosure and mount it to the column.	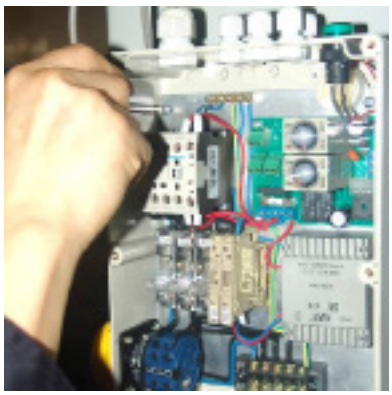

C. Wiring the latch's solenoid valve latch & limit switch:

Find the longest wire "**G**". Feed it through the opening atop the column.	
Continue feeding the wire through the overhead beam and insert it through the opening on the other leg.	
Connect the plug.	
Find wire "**E**" and connect it with the valve on the main-side column.	

Install the limit switch.	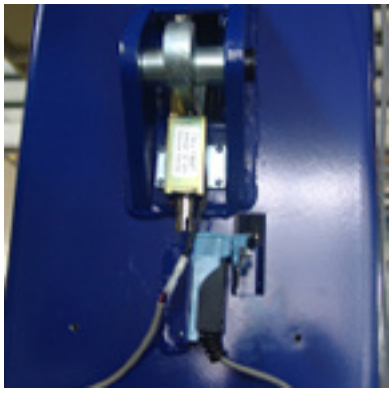
Connect wire end with connector "**B**" to the circuit board.	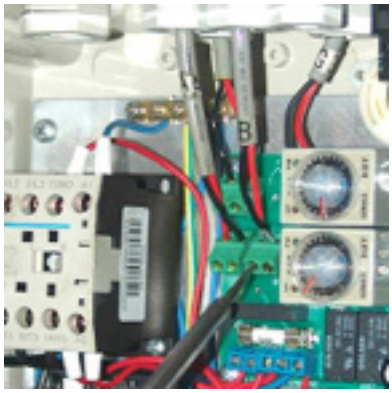
Remove the screws on the switch. Place the switch in the hole near the solenoid valve of the main-side column. Push the switch through the hole until hearing a click. Secure it using the screws and tighten.	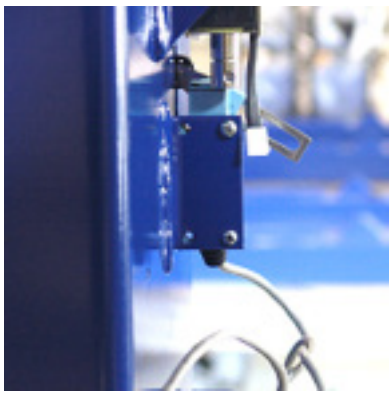

D. Wiring high-limit switch & power unit:

Connect wire end with connector "**A**" to the circuit board.	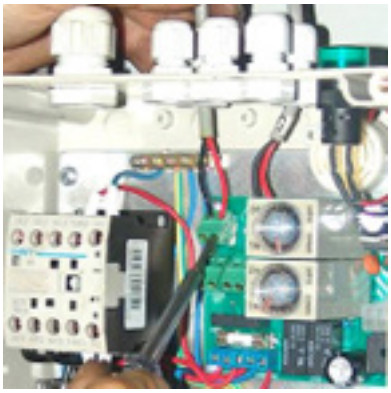
Connect wire end with connector "**C**" to the circuit board.	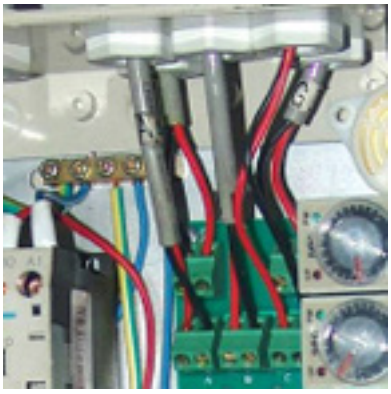
Insert the power line from the power unit into the control box. Connect the wires "**L1**" & "**L3**". Ground the power line.	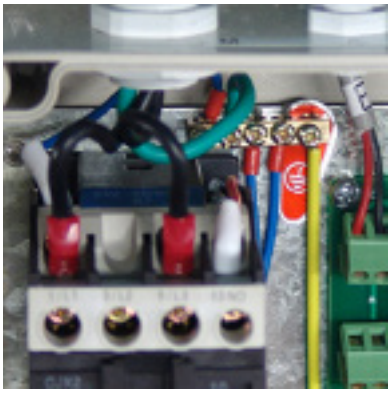

E. Wiring the power cable:

Insert the power cable into the control box.	
Remove the cover off of the connection bar. Connect wires "**L1**", "**L2**", "**L3**", "**N**", & "**PE**" to the connection bar.	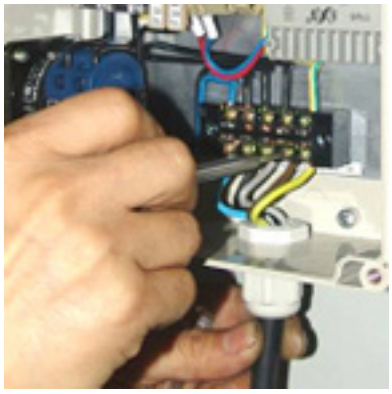
Replace the cover onto the connection bar.	

F. Final control box assembly:

Connect the plug on the front panel with the connector from the control box.	
Tighten the screws on the front panel.	
Locate the 4 holes in the column for the cover.	
Using 4 M6 screws, mount the cover onto the column.	

Connection Diagram for Peripheral Electronics

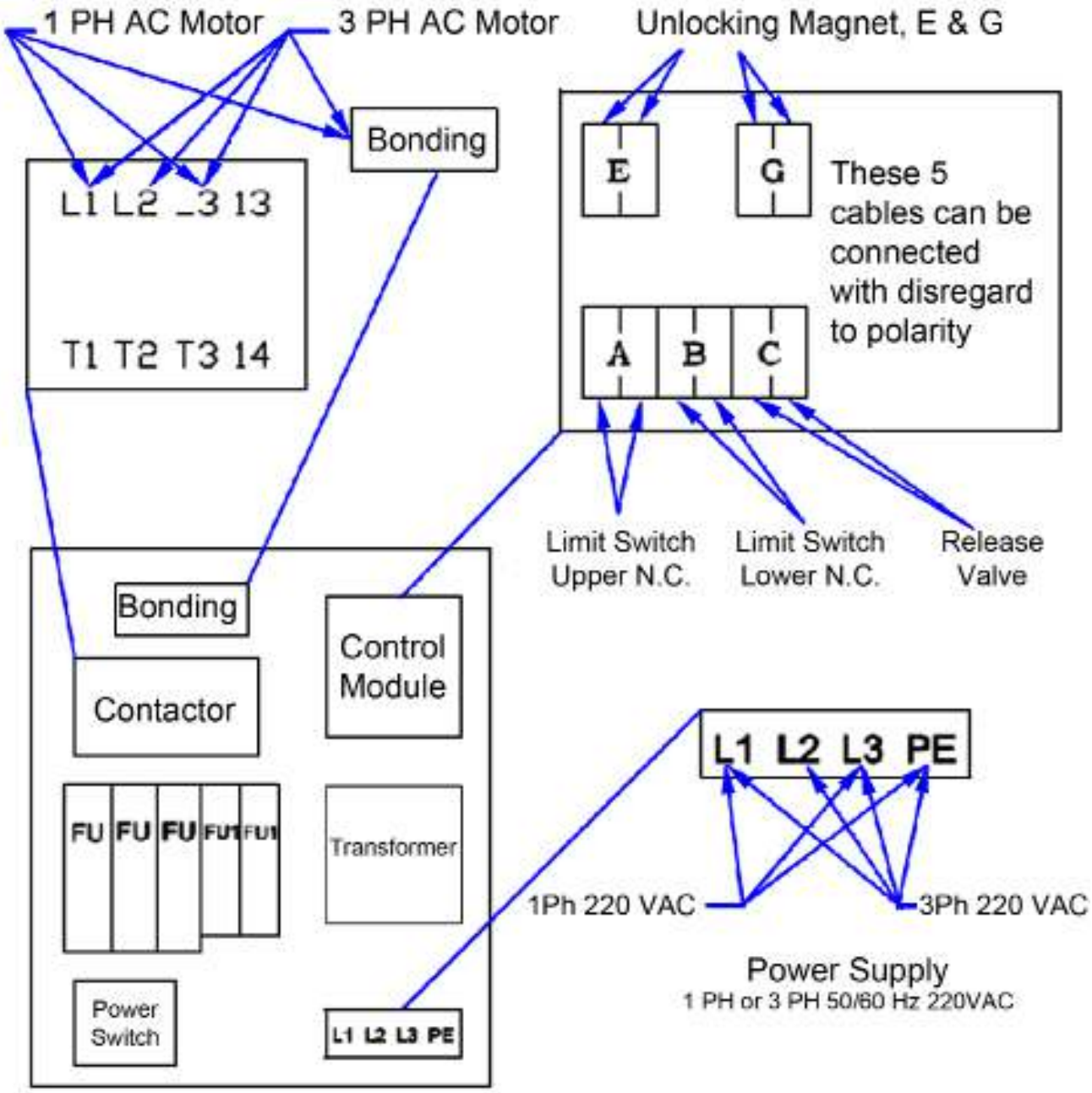

Internal Wiring is not depicted in this diagram.

4. Startup & Testing

4.1 Load Tests

1. Raise the lift to maximum height. Lower the lift onto the safety latches. Raise the carriages enough to disengage the latch pull-rods. Remove both pull-rods and lower the lift to the ground.

2. Raise the lift to its maximum height without any load. Lower it to the ground fully. Repeat this step for a minimum of 3 times to ensure all air has been removed from the hydraulic system.

3. The latches should click in unison as the lift is being raised. When the carriages are lowered onto the safety locks, you should not be capable of disengaging either pull-rod.

4. Raise a vehicle 3” (1 m) in the air. Lower it onto the safety latches. Raise the carriages enough to disengage the pull-rods. Lower the vehicle to the ground.

5. Raise the vehicle again to full height. Lower it to engage the safety latches. Raise the carriages enough to disengage the pull-rods and then lower the vehicle to the ground. Repeat this cycle for a total of 10 times.

6. After completing the 10 cycles, recheck the tightness anchors. Ensure that each anchor bolt is tightened to at least 90 ft·lb (122 Nm).

4.2 Pre-startup Checklist

1. Note that the latch is in the open position when installed in the column. The limit switch is also in the open position by default.

2. Be sure that the hydraulic fluid meets ISO-22 standards.

3. Have a certified electrician establish a 400V/50Hz/60A power supply for the motor and overheat switch. Be sure to protect against indirect contact using an RCCB.

4. Be sure to complete all load tests to ensure that all air has been vacated from the hydraulic system.