TEXAS EQUIPMENT

2 Post Asymmetric Lift

PARTS CATALOG

United States

3301 W MacArthur Blvd
Santa Ana, CA 92704 USA
Tel: +1 (949) 333-3800
Fax: +1 (949) 333-3804

United Arab Emirates

Saif Zone T5-008
Sharjah, UAE
Tel: +971 (06) 552 98 60
Fax: +971 (06) 552 98 61

Egypt

AutoMechanica
15th of May Street
Shoubra Al-Khaimah 13793
Tel: +20 115 808 5046



Model
27010L

Exploded Diagram

27010L

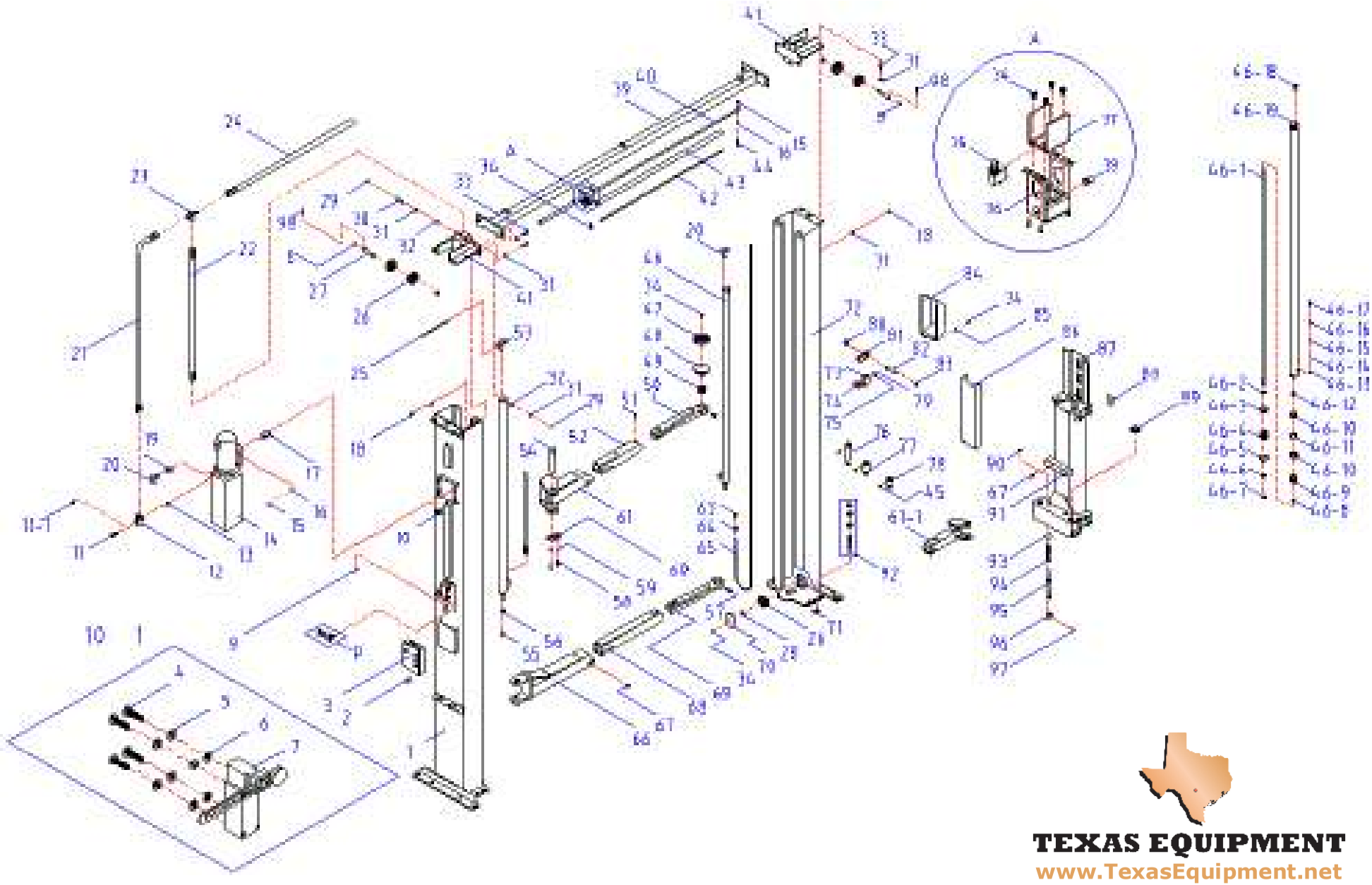

TEXAS EQUIPMENT
www.TexasEquipment.net

ITEM	CODE	DESCRIPTION	QTY
1	165948*01-001	Columns	1
2	165948*01-002	Screw	4
3	165948*01-003	Box	1
4	165948*01-004	Screw	4
5	165948*01-005	Spring washer	4
6	165948*01-006	Washer	4
7	165948*01-007	Switch	1
8	165948*01-008	Flat washer	4
9	165948*01-009	Damper	2
10	165948*01-010	Magnet	1
11	165948*01-011	Fitting	1
11—1	165948*01-011-1	Plug	1
12	165948*01-012	T-fitting	1
13	165948*01-013	O-ring	1
14	165948*01-014	Pump	1
15	165948*01-015	Nut	9
16	165948*01-016	Washer	9
17	165948*01-017	Damp washer	4
18	165948*01-018	Nut	12
19	165948*01-019	Fitting (SPX 3/8" / Duro 9/16")	1
20	165948*01-020	Elbow fitting	2
21	165948*01-021	Oil pipe	2
22	165948*01-022	Oil pipe	1
23	165948*01-023	T-Fitting	1
24	165948*01-024	Oil pipe	1
25	165948*01-025	Air tube	1
26	165948*01-026	Pulley	6
27	165948*01-027	Spindle	2
28	165948*01-028	Washer	2
29	165948*01-029	Washer	4
30	165948*01-030	Pin	2
31	165948*01-031	Washer	28

ITEM	CODE	DESCRIPTION	QTY
32	165948*01-032	Sheath	4
33	165948*01-033	Haxangular bolt	12
34	165948*01-034	Bolt	34
35	165948*01-035	Switch	1
36	165948*01-036	Switch Cover	1
37	165948*01-037	Plate	1
38	165948*01-038	Cap	1
39	165948*01-039	Cross beam	1
40	165948*01-040	Pole	1
41	165948*01-041	Linking bracket	2
42	165948*01-042	Air tube	1
43	165948*01-043	Sponge bush	1
44	165948*01-044	Haxanguler bolt	1
45	165948*01-045	Socket hex bolt	12
46	165948*01-046	Hydraulic cylinder	2
46-1	165948*01-046-1	Ram	2
46-2	165948*01-046-2	Seal	2
46-3	165948*01-046-3	O-ring	2
46-4	165948*01-046-4	Guide ring	2
46-5	165948*01-046-5	Circlip	2
46-6	165948*01-046-6	Dust ring	2
46-7	165948*01-046-7	C-clip	2
46-8	165948*01-046-8	O-ring	2
46-9	165948*01-046-9	Piston	2
46-10	165948*01-046-10	Seal	4
46-11	165948*01-046-11	Guide ring	2
46-12	165948*01-046-12	Nut	2
46-13	165948*01-046-13	Board	2
46-14	165948*01-046-14	Spring	2
46-15	165948*01-046-15	Flow-control valve	2
46-16	165948*01-046-16	Washer	2
46-17	165948*01-046-17	Connector	2

ITEM	CODE	DESCRIPTION	QTY
46-18	165948*01-046-18	Connector	2
46-19	165948*01-046-19	Cylinder body	2
47	165948*01-047	Rubber Pad	4
48	165948*01-048	Pad Base	4
49	165948*01-049	Helicoil	4
50	165948*01-050	Swing arm - Short end	2
51	165948*01-051	Bolt	4
52	165948*01-052	Swing arm - Short middle	2
53	165948*01-053	T-Fitting	1
54	165948*01-054	Pin	4
55	165948*01-055	Nut	2
56	165948*01-056	Nut	2
57	165948*01-057	Elbow fitting	4
58	165948*01-058	Haxangular bolt	8
59	165948*01-059	Washer	8
60	165948*01-060	Gear	4
61	165948*01-061	Swing arm - Left hinge	1
61-1	165948*01-061-1	Swing arm - Right hinge	1
62	165948*01-062	Washer	4
63	165948*01-063	Nut	8
64	165948*01-064	Washer	4
65	165948*01-065	Safety cable	2
66	165948*01-066	Swing arm - Long hinge	2
67	165948*01-067	Bolt	8
68	165948*01-068	Swing arm - Long middle	2
69	165948*01-069	Swing arm - Long end	2
70	165948*01-070	Cover	2
71	165948*01-071	Adjustable washer	16
72	165948*01-072	Column joinings	1
73	165948*01-073	Electromagnet	1
74	165948*01-074	Plate	2
75	165948*01-075	Screw	8

ITEM	CODE	DESCRIPTION	QTY
76	165948*01-076	Spindle	4
77	165948*01-077	Spindle	4
78	165948*01-078	Spindle	4
79	165948*01-079	Screw	8
80	165948*01-080	Case	4
81	165948*01-081	Retainer	2
82	165948*01-082	Rod	2
83	165948*01-083	Washer	4
84	165948*01-084	Cover	2
85	165948*01-085	Washer	8
86	165948*01-086	Shield	2
87	165948*01-087	Carriage	2
88	165948*01-088	Rubber block	16
89	165948*01-089	Washer	4
90	165948*01-090	Washer	4
91	165948*01-091	Rubber Washer	2
92	165948*01-092	Anchor bolt	12
93	165948*01-093	Plastic ball	4
94	165948*01-094	Spring	4
95	165948*01-095	Rack spindle	4
96	165948*01-096	Gear	4
97	165948*01-097	Pin	4
98	165948*01-098	Split pin	4