TEXAS EQUIPMENT

Mobile Single Post Lift

PARTS CATALOG

United States

17779 Main Street Suite C
Irvine, CA 92614 USA
Tel: +1(949) 333-3800
Fax: +1(949) 333-3804

United Arab Emirates

P.O. Box 121971 Saif Zone A2-032
Sharjah, UAE
Tel: +971 (06) 552 98 60
Fax: +971 (06) 552 98 61

Egypt

9A Al-Mothalath
End of Mostafa El-Nahas Street
Nasr City, Cairo 11528 Egypt
Tel: +2019 550 0001
Fax: +2022 472 4346



Model
16906L

Exploded Diagram

16906

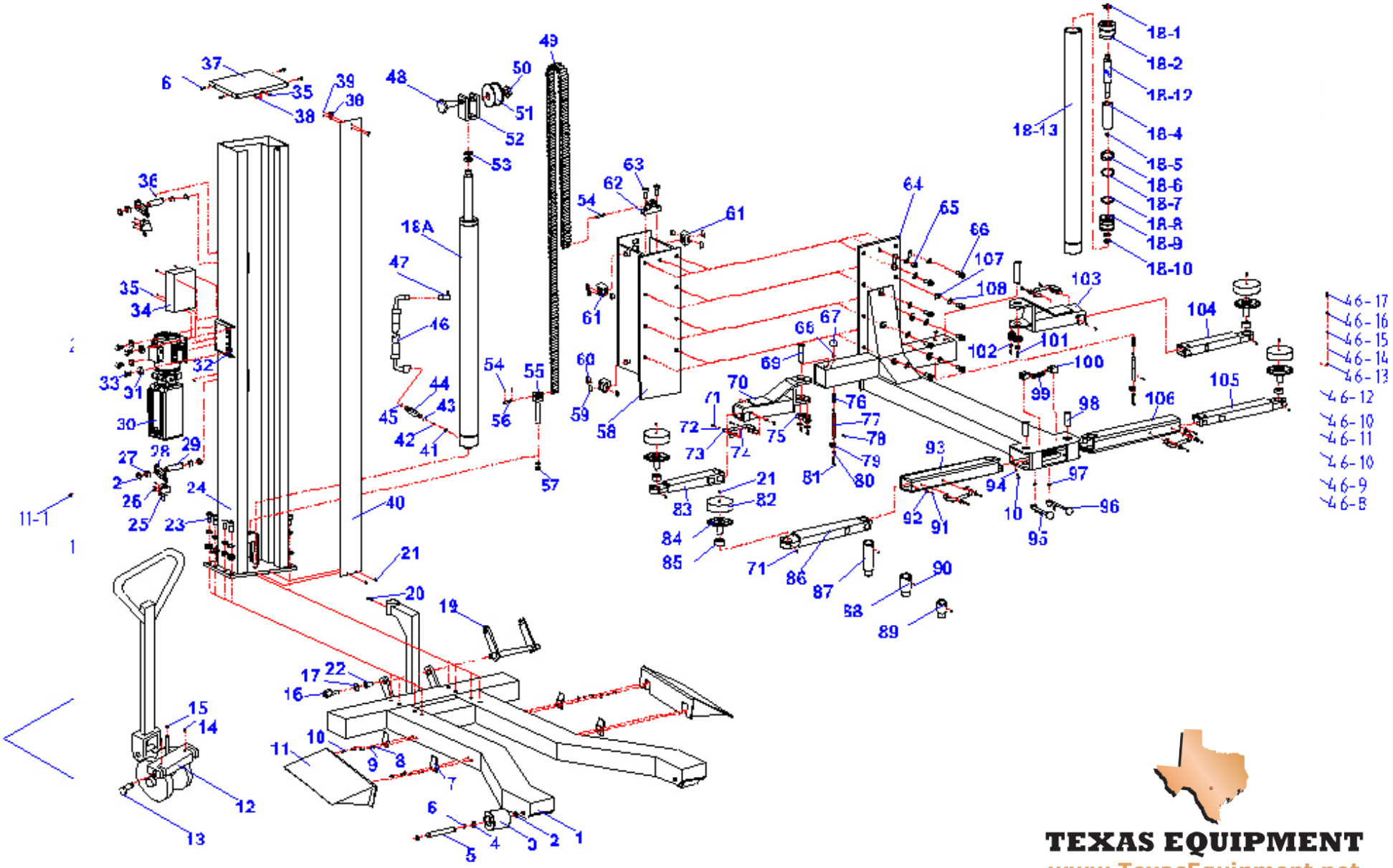

TEXAS EQUIPMENT
www.TexasEquipment.net

ITEM	CODE	DESCRIPTION	QTY
1	167251D*01-001	Base plate	1
2	167251D*01-002	Elastic washer	8
3	167251D*01-003	Pulley	2
4	167251D*01-004	Bearing	4
5	167251D*01-005	Spindle	2
6	167251D*01-006	Bushing	4
7	167251D*01-007	Fixing plate	4
8	167251D*01-008	Flat washer	8
9	167251D*01-009	springwasher	8
10	167251D*01-010	Bolt	14
11	167251D*01-011	ramp	2
12	167251D*01-012	Dolly	1
13	167251D*01-013	Pin	2
14	167251D*01-014	Elastic pin	2
15	167251D*01-015	Ball bearing	1
16	167251D*01-016	Bolt	2
17	167251D*01-017	Flat washer	2
18A	167251D*01-018	Hydraulic cylinder ass’y	1
18-1	167251D*01-018-1	Dust ring	1
18-2	167251D*01-018-2	Guide ring	1
18-12	167251D*01-018-12	Piston rod	1
18-4	167251D*01-018-4	Sheath	1
18-5	167251D*01-018-5	O ring	1
18-6	167251D*01-018-6	Guide ring	1
18-7	167251D*01-018-7	O ring	1
18-8	167251D*01-018-8	U ring	1
18-9	167251D*01-018-9	Piston	1
18-10	167251D*01-018-10	Nut	2
18-13	167251D*01-018-13	Cylinder	1
19	167251D*01-019	Support	1
20	167251D*01-020	Bolt	1
21	167251D*01-021	Screw	8

ITEM	CODE	DESCRIPTION	QTY
22	167251D*01-022	Bushing	2
23	167251D*01-023	Bolt	8
24	167251D*01-024	Column	1
25	167251D*01-025	magnetic coil	2
26	167251D*01-026	screw	8
27	167251D*01-027	position slot	4
28	167251D*01-028	safety board	2
29	167251D*01-029	shaft	2
30	167251D*01-030	Power Unit	1
31	167251D*01-031	flat washer	8
32	167251D*01-032	hex selflocking nut	4
33	167251D*01-033	bolt	4
34	167251D*01-034	control unit	1
35	167251D*01-035	screw	8
36	167251D*01-036	rubber stoper	2
37	167251D*01-037	Cover	1
38	167251D*01-038	hook	1
39	167251D*01-039	hex selflocking nut	4
40	167251D*01-040	protecting board	1
41	167251D*01-041	copper washer	1
42	167251D*01-042	Elastic washer	1
43	167251D*01-043	Washer	1
44	167251D*01-044	Connection hose	1
45	167251D*01-045	O ring	1
46	167251D*01-046	Hose	1
47	167251D*01-047	Direct fitting	1
48	167251D*01-048	Spindle	1
49	167251D*01-049	Chain ass’y	1
50	167251D*01-050	Nut	1
51	167251D*01-051	Wheel	1
52	167251D*01-052	Wheel basement	1
53	167251D*01-053	Nut	2

ITEM	CODE	DESCRIPTION	QTY
54	167251D*01-054	cotton pin	4
55	167251D*01-055	Position bar	1
56	167251D*01-056	Chain spindle	2
57	167251D*01-057	Nut	2
58	167251D*01-058	Sliding support	1
59	167251D*01-059	Slide Block	4
60	167251D*01-060	Slide Block	8
61	167251D*01-061	support of block	4
62	167251D*01-062	Position bar	1
63	167251D*01-063	Bolt	2
64	167251D*01-064	Hoist ass’y	1
65	167251D*01-065	Bolt	1
66	167251D*01-066	Bolt	8
67	167251D*01-067	handle	2
68	167251D*01-068	Circuit	2
69	167251D*01-069	pin	2
70	167251D*01-070	left front arm	1
71	167251D*01-071	Bolt	12
72	167251D*01-072	spring washer	8
73	167251D*01-073	Flat washer	8
74	167251D*01-074	protecting ring	4
75	167251D*01-075	half gear	2
76	167251D*01-076	spring	2
77	167251D*01-077	smallshaft	2
78	167251D*01-078	cotton pun	2
79	167251D*01-079	small gear	2
80	167251D*01-080	nut	2
81	167251D*01-081	socket bolt	2
82	167251D*01-082	Rubber washer	4
83	167251D*01-083	left front arm extension	1
84	167251D*01-084	pad	4
85	167251D*01-085	screw slot	4

ITEM	CODE	DESCRIPTION	QTY
86	167251D*01-086	left rear arm extension	1
87	167251D*01-087	adaptor (3#)	4
88	167251D*01-088	adaptor (2#)	4
89	167251D*01-089	adaptor (1#)	4
90	167251D*01-090	socket bolt	1
91	167251D*01-091	socket bolt	12
92	167251D*01-092	nut	8
93	167251D*01-093	left rear arm	8
94	167251D*01-094	nut	4
95	167251D*01-095	release handle(left)	2
96	167251D*01-096	release handle(right)	2
97	167251D*01-097	Circuit	2
98	167251D*01-098	pin	2
99	167251D*01-099	spring	2
100	167251D*01-100	gear block	2
101	167251D*01-101	bolt	2
102	167251D*01-102	flat washer	4
103	167251D*01-103	right front arm	1
104	167251D*01-104	right front arm extention	4
105	167251D*01-105	right rear arm extention	4
106	167251D*01-106	right rear arm	1
107	167251D*01-107	flat washer	4
108	167251D*01-108	spring washer	4
			4