TEXAS EQUIPMENT

4-Post Lift

INSTALLATION GUIDE

United States

17779 Main Street Suite C
Irvine, CA 92614 USA
Tel: +1(949) 333-3800
Fax: +1(949) 333-3804

United Arab Emirates

P.O. Box 121971 Saif Zone A2-032
Sharjah, UAE
Tel: +971 (06) 552 98 60
Fax: +971 (06) 552 98 61

Egypt

9A Al-Mothalath
End of Mostafa El-Nahas Street
Nasr City, Cairo 11528 Egypt
Tel: +2019 550 0001
Fax: +2022 472 4346

Model 46614



Contents

1. Introduction

- Welcome
- How To Use This Guide
- How To Receive Additional Help
- Safety

2. Unloading & Unpacking

- Precautions
- Unloading Procedure
- Unpacking Procedure
- Packing List

3. Installation & Setup

- Site Selection
- Foundation Requirements
- Required Tools
- Installation Procedures
- Troubleshooting

1. Introduction

1.1 Welcome

Congratulations on purchasing the 46614 4-Post Hydraulic Lift. In the pages that follow you will find information on how to unload, unpack, assemble, and test your new lift. Please take the necessary time to thoroughly read this manual to ensure that you know what is required for a safe and smooth installation.

1.2 How To Use This Guide

This Installation Guide provides detailed, step-by-step instructions to direct you through the entire installation process. Please read through the entire guide prior to beginning installation to guarantee you have the necessary time and resources to complete the entire installation.

This guide features detailed illustrations and documentation to help assure proper installation. If unclear about any step, please verify with Texas Equipment prior to advancing to the next step.

This guide is arranged in the order which you should perform each task starting with unloading and unpacking. Make sure you complete each step before advancing to the next. It is vital that you do not skip steps in order to guarantee safety. Make sure to complete all required steps including the final test and checklist.

1.3 How To Receive Additional Help

This guide is designed to provide complete, detailed instructions and information to assist in a safe and smooth installation. If you require supplemental information or instructions, or encounter any problems or issues during the installation process, please contact Texas Equipment directly at +1 (949) 333-3800.

1.4 Safety

It is required that all persons involved with any part of the installation wear heavy-duty work gloves and reliable eye protection. Because of the bulky and heavy parts involved in the installation and the necessary tools and equipment, it is mandatory that all persons involved be in healthy condition and not be under the influence of any medications, alcohol, or any other intoxicants. Failure to adhere to these conditions could result in serious injury.

2. Unloading & Unpacking

2.1 Precautions



Unloading, unpacking, and installation procedures can be extremely dangerous if not performed with the utmost attention. Clear the entire area of any bystanders to avoid possible injury. Ensure a clean and clear work environment to further reduce the possibility of injury. Verify the integrity and reliability of all equipment used throughout the entire process to prevent equipment failure.

2.2 Unloading Procedure

The components should be unloaded from the truck using a forklift to prevent injury and ensure that the equipment does not get damaged. Unload the lift as close to the installation site as possible. It is recommended that you use scrap wood to support and/or balance the pieces as they are being unloaded and unpacked.

NOTE: *If there is no forklift available, the lift may be unpacked while still on the truck and each individual piece can be carried to the installation site. A minimum of 2 persons each capable of carrying at least 80 lb (35 kg) is required to unload the lift using this process. This method is not recommended due to a higher risk of injury and longer unloading and unpacking time.*

2.3 Unpacking Procedure

Unwrap each component and place them safely near the installation site. It is crucial that you do not overcrowd the area as this could delay the process and cause damage to sensitive components. It is recommended that you use scrap wood to support and/or balance the pieces as they are being unloaded and unpacked. **DO NOT** stand the columns vertically as this may result in severe damage or injury. **DO NOT** stack any heavy or sensitive components directly on-top one another as this could cause severe damage to the equipment. **DO NOT** discard any of the packaging hardware as they are necessary to complete installation.

2.4 Packing List

1. Power-side runway with cylinder, hose and cables (1)
2. Off-side runway (1)
3. Front cross bar with lock release handle (1)
4. Rear cross bar (1)
5. Power-side column with mounting holes for pump (1)
6. Off-side column (3)
7. Column cover (4)
8. Front stop (2)
9. Approaching ramp (2)
10. Long lock linkage rod (1)
11. Beam cover (4)
12. Accessory box containing anchors and shims (1)
13. Electro-hydraulic pump (1)

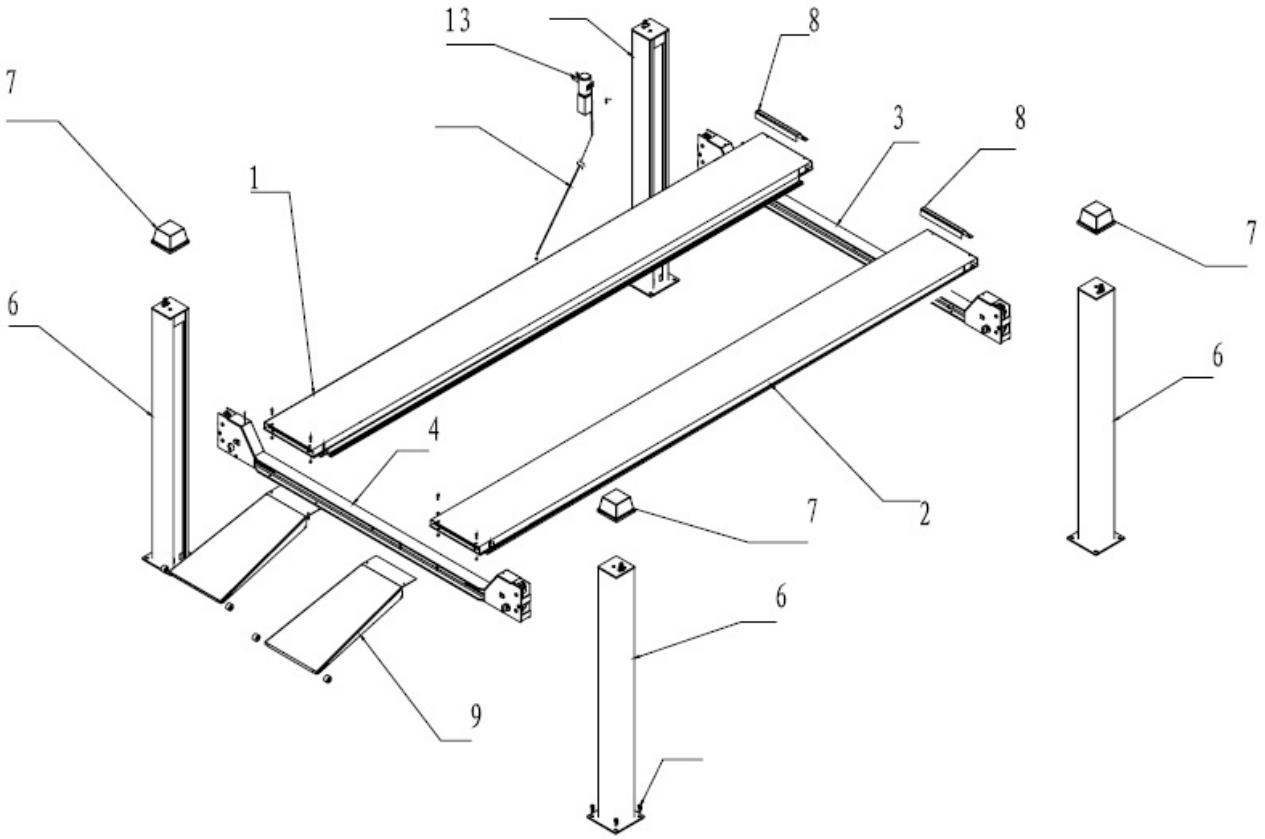

3. Installation & Setup

3.1 Site Selection

The 46614 4-Post Hydraulic Lift is designed **FOR INDOOR USE ONLY**. It may not be installed in a room with explosion hazards. It is not designed for wet environments (such as a car wash). Failure to meet all of these condition could cause equipment failure and serious injury.

3.2 Foundation Requirements

The 46614 4-Post Hydraulic Lift must be installed on level ground. The foundation must be reinforced concrete with a minimum thickness of 6” (150 mm), a compressive strength of at least 4000 psi (275 bar), and no less than a 60” (1500 mm) radius surrounding each column in every direction.

3.3 Required Tools

- Chalk line and 12’ tape measure
- Transit and a 4’ level
- Rotary hammer drill with ¾” masonry bit (Core Drill ReBar cutter suggested)
- Hammer
- Hex-Key/Allen wrench kit
- Sockets and open wrench set
- Medium crescent wrench
- Medium pipe wrench
- Crow bar
- Medium flat screwdriver
- Cross screwdriver
- Vise grips

3.4 Installation Procedures

NOTE: *Make sure you read through the entire installation procedure prior to beginning the process. The will ensure that you fully understand what will be required and will prevent delays during installation. Whenever possible, use the original blueprints for reference. Make sure you satisfy all of the requirements specified in 3.1 and 3.2 prior to beginning installation.*

1. **Site Layout:**

   A. Determine which side will be the approach side.

   B. The power-side runway is always installed on the back, left side when viewed from the approach side. The power-side column has the power-unit mounting space on its side.

   C. After a location has been determined, use a carpenter's chalk line to layout the grid for the post locations. Use the dimensions shown in Fig. 2

   D. After the post locations are marked, use chalk or crayon to make an outline of the posts on the floor at each location using the post base plates as a template.

      Double check all dimensions to ensure the layout is perfectly square.

      Before continuing with the installation it is helpful to stand the posts in their respective locations and drive a vehicle into position to check for adequate clearance.



DO NOT use these chalk lines for lining up or positioning any of the parts or equipment. These lines are for **REFERENCE ONLY** and are approximations. Please follow the detailed instructions for positioning each piece.

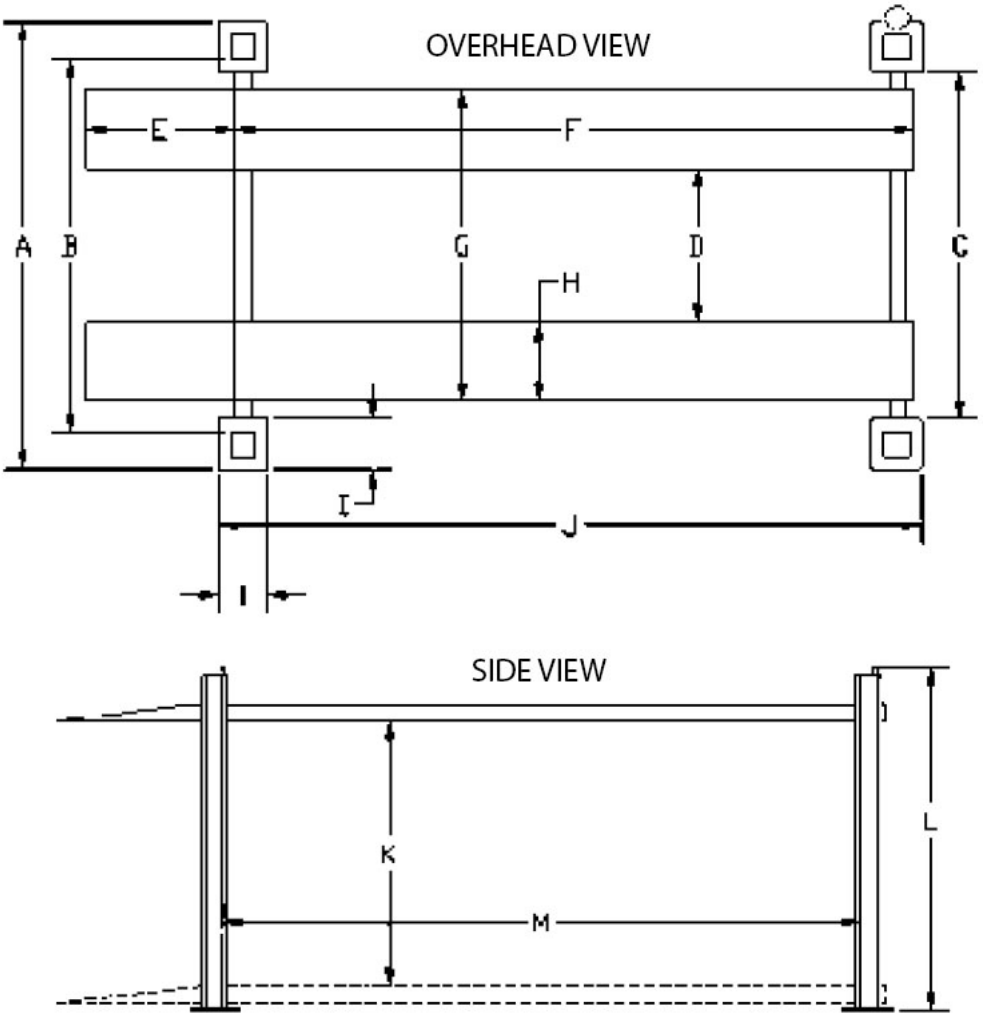

ITEM		MODEL 46614
OVERALL WIDTH	A	122⅞” (3120 mm)
BETWEEN COLUMNS	B	104⅞” (2660 mm)
INSIDE SOLEPLATE OF COLUMNS	C	100⅞” (2560 mm)
BETWEEN RUNWAYS	D	36½” (928 mm)
RAMP LENGTH	E	35⅞” (910 mm)
RUNWAY LENGTH	F	191⅜” (4860 mm)
OUTTER RUNWAY WIDTH	G	78” (1980 mm)
RUNWAY WIDTH	H	19” (482 mm)
SOLEPLATE DIMENSIONS	I	11 x 11” (280 x 280 mm)
OVERALL LENGTH	J	195½” (4960 mm)
LIFTING HEIGHT	K	69½” (1760 mm)
OVERALL HEIGHT	L	87⅝” (2225 mm)
LENGTH BETWEN COLUMNS	M	177⅛” (4500 mm)

3. **Installing the columns with cross bars:**

A. Before proceeding, double check measurements and make certain that the bases of each column are square and aligned with the chalk line.

B. Locate the columns at their respective locations according to the chalk line layout. Make sure to place the power-side column in the proper corner. **DO NOT BOLT THE COLUMNS IN YET**.

C. Unbolt the safety rack inside the bottom of each column. **FIG. 4**

D. Insert the end of the crossbars into the columns. The end of the front cross bar with the lock release handle goes into the power-side column. The handle should face out towards the front. **FIG. 5**

E. Insert the safety rack into the cross bar end as shown. **FIG. 6**



Fig.4



Fig.5



Fig.6

F. Hold down the safety rack and raise the cross bar ends to rest on the lowest position. **FIG. 7**

G. Tighten the bolt on the bottom of the safety racks. **FIG. 8**

H. Using the base plate on the column as a guide, drill each anchor hole in the concrete approximately 5½" (140 mm) deep using a rotary hammer drill and ⅝" concrete drill-bit. To assure full holding power, do not ream the hole or allow the drill to wobble. **FIG. 9**



Fig.7



Fig. 8



Fig. 9

I. After drilling, remove dust from each hole using compressed air and/or a wire brush. Make certain that the column remains aligned with the chalk line during this process.

J. Assemble the washers and nuts on the anchors then tap into each hole with a block of wood or rubber hammer until the washer rests against the base plate. If shimming is required ensure that enough threads are left exposed.

K. Using a level, check column plumb for every side. **FIG. 10**. If shimming is required, use ¾" washers or shim stock, placing shims as close as possible to the hole. This will prevent bending the column base plates.

L. With the shims and anchor bolts in place, tighten by securing the nut to the base with 2-3 full turns clockwise. **DO NOT** use an impact wrench.

M. Use the level to check the front and rear cross bars. **FIG 11**.

If necessary, turn the rack nut on the top of the column to raise the lower end of the cross bar. Finally, tighten all the bolts. **FIG. 12**



Fig.10



Fig.11



Fig. 12

4. **Mounting the runway:**

A. Put the off-side runway on the cross bar on the right side. Ensure the utility rails for beam lift are on the inside. **FIG. 13**.

B. Using the bolts provided, bolt the right-rear end of the off-side runway to the rear cross bar. The other end does not need to bolted.

C. Before placing the power-side runway on the cross bars, pull out the cables from underneath and place over the pulleys. The shorter cable is for the power-side column. The longer one is for the opposite side.

D. Remove the stop plate of the big pulley shaft on one end of the cross bar. **FIG. 14**. Take out the big pulley to feed the cable through it. **FIG 15**. Re-install the big pulley and fasten on the stop plate.


Fig. 13


Fig.14


Fig.15

E. Tighten all the bolts on the power-side runway with supplied bolts, nuts and washers.

F. Bolt the threaded end of the cable on the top of the column. FIG 16. Do the same for the other cables and columns.


Fig. 16


Fig.17


Fig. 18

5. **Mounting the power unit:**

   A. Attach the power unit to the power-side column using bolts, nuts and washers supplied. **FIG. 17**.

   B. Have a certified electrician run the 220V/60Hz single phase power supply to the motor. Be sure to size the wire for a 25 amp circuit.

6. **Routing the cables:**

   A. Check the cables to ensure the are resting properly on the pulleys.

   B. Ensure that there is adequate power for the motor.

   C. Raise the runways a little. Make sure the safety latches are not resting on the racks.

   D. Use a level to check that all the cross bars and runways are level. If it is not level, adjust cable length using the nut on the column.

      The cables should be checked weekly for equal tension. Failure to do so may cause uneven lifting. The cables should be adjusted to have equal tension while the cross bars are resting on the safety locks.

7. **Mounting the accessories/ First start up:**

   A. Mount the front stops. **FIG. 18**.

   B. Connect the long linkage rod from the front cross bar to the rear cross bar.

   C. Mount the approach ramps.

   D. Put on the colum covers.

   E. Cycle the lift up and down several times to ensure the latches click into
   D. place properly

      To lower the lift, the latches must be manually released while the lowering handle of the pump is pressed.

3.5 Troubleshooting

PROBLEM	CAUSE	REMEDY
MOTOR DOES NOT RUN	1. Button does not work	1. Replace Button
	2. Wiring connections are in bad condition	2. Repair wiring connections
	3. Motor is burned out	3. Repair or replace motor
	4. AC contactor is burned out	4. Replace AC contactor
	5. Height limit switch is damaged	5.Replace height limit switch
MOTOR RUNS BUT THE LIFT DOES NOT RAISE	1. Motor is running in reverse rotation	1. Reverse the two power wires
	2. Release valve is damaged	2. Repair or replace
	3. Gear pump is damaged	3. Repair or replace
	4. Relief valve or check valve is damaged	4. Repair or replace
	5. Low oil level	5. Fill tank
LIFT DOES NOT STAY UP	1. Release valve is damaged	1. Repair or replace
	2. Relief valve or check valve leakage	2. Repair or replace
	3. Cylinder or fittings leaking	3. Repair or replace
LIFT RAISES TOO SLOW	1. Oil line is clogged	1. Clean the oil line
	2. Motor running on low voltage	2. Check electrical system
	3. Oil mixed with air	3. Refill tank
	4. Overload lifting	4. Check load