TEXAS EQUIPMENT

4 Post Hydraulic Lift

14,000 lbs

United States

17779 Main Street Suite C
Irvine, CA 92614 USA
Tel: +1 (949) 333-3800
Fax: +1 (949) 333-3804

United Arab Emirates

P.O. Box 121971
Saif Zone A2-032
Sharjah, UAE
Tel: +971 (06) 552 98 60
Fax: +971 (06) 552 98 61

Egypt

28 Abdel Azim El-Ghoilemi Street
Nasr City, Cairo – Egypt
Tel: +(202) 22747083
Fax: +(202) 22876559



Model
46714

Specifications:

- Lifting Capacity 14,000 lbs (6,300 kg)
- Lifting Height 6⅝ - 67” (170 - 1700 mm)
- Overall Dimensions 237⅞ (L) x 122⅞ (W) x 92⅞” (H) (6040 x 3120 x 2360 mm)
- Track Width 20” (510 mm)
- Net Weight 2756 lbs (1250 kg)
- Shipping Weight 2976 lbs (1350 kg)

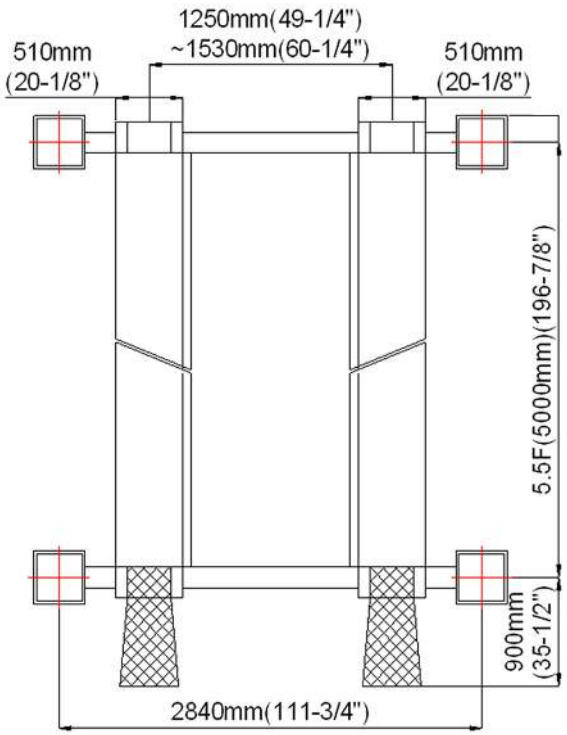

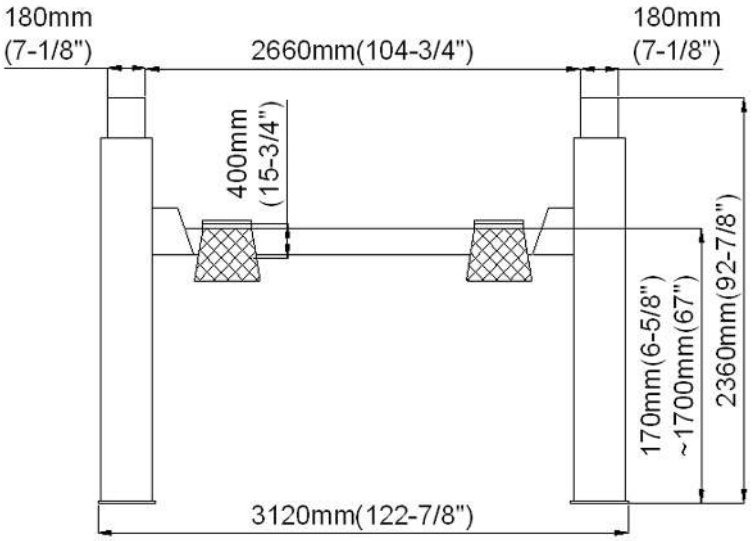

Features:

- Chain Driven
- US Made Electric / Hydraulic Power System
- Single Point Pneumatic Safety Release System
- Heavy-duty “C” Channel Steel Construction
- Non-skid Diamond Plate Runways
- Front & Rear Wheel Stops For Safety
- Wide Runways To Accommodate Wide & Narrow Vehicles

Accessories



Rolling Jack



Rolling Oil Drain